A G E N D A

Regular Meeting of the Bedford City Council
Tuesday, July 28, 2020
Bedford City Hall Building A
2000 Forest Ridge Drive
Bedford, Texas 76021

Council Chamber Work Session 5:30 p.m.
Council Chamber Regular Session 7:30 p.m.

COMPLETE COUNCIL AGENDAS AND BACKGROUND INFORMATION ARE AVAILABLE FOR REVIEW ONLINE AT http://www.bedfordtx.gov

In order to advance the public health goal of limiting face-to-face meetings (also called "social distancing") to slow the spread of the Coronavirus (COVID19), there will be no public access to the location described above. Residents interested in the meeting can watch it live on the City's website at https://bedfordtx.gov/250/City-Council-Meetings-Online or tune in to channels 16 (Spectrum) or 99 (AT&T).

The agenda packet and meeting information are posted online at https://bedfordtx.gov/AgendaCenter/City-Council-2. You may provide written comments on specific agenda items prior to the meeting by filling out the Comment Form at https://bedfordtx.gov/FormCenter/City-Council-11/City-Council-Meeting-Sign-Up-Form-51, emailing citysecretary@bedfordtx.gov or calling 817-952-2104. You may also use the Comment Form to sign up to speak on specific agenda items during the meeting by phone. You must provide a valid phone number and you will be called during the meeting at the appropriate time. All comments and requests to speak need to be received by 3:00 p.m. the day of the meeting.

WORK SESSION

- **Update from staff on the Phase Next Park tenant relocation of Onstage, Trinity Arts Guild, and Clubhouse for Special Needs, as well as an update on the asbestos abatement, building demolition, and starting date for breaking ground. **This item requested by Councilmember Burnett.**

- **Presentation and discussion on an agreement offer by Motorola Solutions, Inc. for the replacement of the City's fleet of radio equipment in the amount of $1,849,254.29.**

EXECUTIVE SESSION

To convene in closed session in compliance with Section 551.001 et. Seq. Texas Government Code, to discuss the following:

a) **Pursuant to Section 551.074, personnel matters – City Manager search.**
b) **Pursuant to Section 551.072, to deliberate the purchase, exchange, lease or value of real property – Block 2, Lot 1, Bedford Baptist Temple Sub.**

REGULAR SESSION

CALL TO ORDER/GENERAL COMMENTS

INVOCATION

PLEDGE OF ALLEGIANCE

OPEN FORUM *(The public is invited to address the Council on any topic that is posted on this agenda. Citizens desiring to speak on Public Hearing(s) must do so at the time the Public Hearing(s) are opened. In order to speak during Open Forum, a person must first sign in with the City Secretary prior to the Regular Session being called to order. Speakers will be called upon in the order in which they sign in. Any person not signing in prior to the commencement of the Regular Session shall not be allowed to speak under Open Forum. Further, Open Forum is limited to a maximum of 30 minutes. Should speakers not use the entire 30 minutes Council will proceed with the agenda. At the majority vote of the Council the Mayor may extend the time allotted for Open Forum.)*

CONSIDER APPROVAL OF ITEMS BY CONSENT (*Consent items are deemed to need little Council deliberation and will be acted upon as on business item. Any member of the City Council may request that an item be withdrawn from the Consent Agenda and placed before the City Council for full discussion. Approval of the Consent Agenda authorizes the City Manager, or a designee, to implement each item in accordance with staff recommendation.)*

1. **Consider approval of the following City Council minutes:**
   a) **July 13, 2020 executive session**
   b) **July 14, 2020 regular session**

NEW BUSINESS

2. **Consider an ordinance amending Chapter 54, "Environment" of the City of Bedford Code of Ordinances by amending Sections 54-67 through 54-68, providing for a penalty clause; providing for a repealing clause; providing for a severability clause; and declaring an effective date.**

3. **Consider a resolution authorizing the Interim City Manager to purchase a Community Service Maintenance Storage Building, in the amount of $241,680, through the BuyBoard Cooperative Purchasing Program.**

4. **Consider a resolution authorizing the Interim City Manager to enter into an agreement with Custard Construction Services, in the amount of $60,572.36, utilizing the Texas Interlocal Purchasing System (TIPS), for the abatement of Asbestos Containing Material (ACM) in the six structures to be demolished at Generations Park.**

5. **Consider a resolution authorizing the Interim City Manager to enter into an agreement with Ark Contracting Services, LLC, in the amount of $475,948, for the Brookwood Hills Stream and Sanitary Sewer Rehabilitation project.**

6. **Mayor/Council Member Reports**

7. **Report on most recent meeting of the following Boards and Commissions:**

- ✓ **Animal Shelter Advisory Board**
- ✓ **Beautification Commission**
- ✓ **Community Affairs Commission**
- ✓ **Cultural Commission**
- ✓ **Economic Development Foundation**
- ✓ **Library Advisory Board**
- ✓ **Parks and Recreation Board**
- ✓ **Teen Court Advisory Board**
- ✓ **Senior Center Representative**

8. **City Manager/Staff Reports**
   a) **Report on efforts to support Bedford businesses.**

9. **Take any action necessary as a result of the Executive Session.**
   (Any item on this posted agenda may be discussed in executive session provided it is within one of the permitted categories under Chapter 551 of the Texas Government Code.)

ADJOURNMENT

CERTIFICATION

I, the undersigned authority, do hereby certify that this Notice of Meeting was posted on the outside window in a display cabinet at the City Hall of the City of Bedford, Texas, a place convenient and readily accessible to the general public at all times, and said Notice was posted by the following date and time: **Friday, July 24, 2020 at 5:00 p.m.**, and remained so posted at least 72 hours before said meeting convened.

Michael Wells, City Secretary **Date Notice Removed**

(Auxiliary aids and services are available to a person when necessary to afford an equal opportunity to participate in City functions and activities. Auxiliary aids and services or accommodations must be requested in writing to the City Secretary's Office a minimum of seventy-two hours (72) hours prior to the scheduled starting time of the posted meeting. Requests can be delivered in person or mailed to the City Secretary's Office at 2000 Forest Ridge Drive, Bedford, TX 76021, or emailed to citysecretary@bedfordtx.gov. Some requests may take longer due to the nature, extent and/or availability of such auxiliary aids, services or accommodations.)

AGENDA

Council Agenda Background

PRESENTER: Councilmember Tom Burnett **DATE:** 07/28/20

Council Request

ITEM:

Update from staff on the Phase Next Park tenant relocation of Onstage, Trinity Arts Guild, and Clubhouse for Special Needs, as well as an update on the asbestos abatement, building demolition, and starting date for breaking ground. **This item requested by Councilmember Burnett.

DISCUSSION:

Councilmember Burnett requested that this item be placed on the agenda.

ATTACHMENTS:

Letter of Request

AGENDA

Amanda Jacobs

From: Michael Wells
Sent: Monday, July 20, 2020 8:22 AM
To: Amanda Jacobs
Subject: FW: Agenda Item for July 28th

--
Michael Wells
Office: 817-952-2104

From: Tom Burnett <Tom.Burnett@bedfordtx.gov>
Sent: Thursday, July 16, 2020 10:34 AM
To: Michael Wells <Michael.Wells@bedfordtx.gov>; Cliff Blackwell <Cliff.Blackwell@bedfordtx.gov>
Cc: Michael Boyter <Michael.Boyter@bedfordtx.gov>; Amy Sabol <Amy.Sabol@bedfordtx.gov>
Subject: Agenda Item for July 28th

Michael,
I would like to add an agenda item to the work session for the July 28th Council Meeting.

I would request an update from staff on the Phase Next Park tenant relocation of Onstage, Trinity Arts Guild and Clubhouse for Special Needs as well an an update on the asbestos abatement, building demolition and starting date for breaking ground.

Thank you,

--
Tom Burnett
Council Member
City of Bedford
2000 Forest Ridge Drive, Bedford, TX 76021-5713
Office: 817-952-2173 | Fax: 817-952-2103 | Tom.Burnett@bedfordtx.gov

AGENDA

Council Agenda Background

PRESENTER: Sean Fay, Fire Chief **DATE:** 07/28/20

Work Session

ITEM:

Presentation and discussion on an agreement offer by Motorola Solutions, Inc. for the replacement of the City's fleet of radio equipment in the amount of $1,849,254.29.

City Attorney Review: N/A

DISCUSSION:

The City's radio equipment is approaching its end-of-life phase and a replacement plan must be approved and implemented soon. While there is still more than two years before the end-of-life phase, for much of the fleet, Motorola has presented the City with an equipment replacement proposal that represents a cost savings compared to projected future costs associated with delaying the fleet's replacement for one to two years.

The radio system, which is used by the Police, Fire, Public Works and Parks Departments, consists of equipment in two broad categories. The first category is system infrastructure, which consists of radio towers, repeaters, generators, and software systems. Since 1996, the City of Bedford has been part of a six-city radio infrastructure association called the Northeast Tarrant County (800 MHz) Trunk Radio Consortium (NETCO) and includes the cities of Colleyville, Euless, Grapevine, Keller, and Southlake. All infrastructure is made by Motorola and system costs are shared equally among participating cities. The second category is radio hardware, which is the equipment directly used by the end-user to communicate. Examples of hardware are portable and mobile radios. The two categories are distinctly separate from one another and are funded by two different mechanisms. This item for consideration is only concerning the fleet of radio hardware used by employees on a daily basis and is directly tied to public safety and to core service provision.

The current fleet of radio hardware consists of portable radios (hand-held), mobile radios (in vehicles) and consolette radios installed at communications stations in the dispatch center. The fleet is made up of a variety of generations of equipment purchased sporadically over time. This creates a situation where some equipment is much older than other equipment. This has developed over many years and is primarily the product of the practice of replacing broken or obsolete equipment on an as-needed basis only. This replacement practice was advantageous for many years because it minimized large impacts to the budget; however, the radio fleet will need to be replaced in the near future and replacement strategies are being evaluated currently.

Like other products on the market, radio hardware has a normal product lifecycle. Radio hardware is commonly available or supported by the market between eight to ten years and is driven by technology and market demands. The City's current radio hardware fleet is aging and most of the equipment is quickly reaching, or has surpassed, its end-of-life stage. In an effort to give customers ample time to prepare for the eventual discontinuation of radio hardware, Motorola announces a "cancellation" date for a particular product. This cancellation notification serves to notify customers and users that the model will be discontinued and is scheduled to be replaced by another product. Motorola has a business practice which guarantees parts, service and support for all canceled equipment for a period up to five years. In some instances, Motorola can provide support for hardware longer than five years; however, there is no guarantee beyond that period. Motorola considers equipment end-of-life to be the date of cancellation or the date production ceases. The end-of-support date is set, at a minimum, five years after the cancellation date. While there may be some opportunity to operate and support certain radio hardware beyond the five-year support period,

it is not advised to rely on this. Because the new radio hardware would be the latest generation of radios on the market, there would be several technological enhancements with the new radios. Enhanced features would include basic and advanced encryption capabilities, Bluetooth, and over-the-air firmware programming, which reduces equipment down-time.

For many years, the City was able to acquire and apply funding from the Tarrant County 9-1-1 District via the PSAP (Public Safety Answering Point) Assistance Program. The funds provided for approximately ten replacement radios per year, which constituted the City's primary replacement strategy. However, in 2019, the Tarrant County 9-1-1 District changed its interpretation of the program guidelines and radio hardware was no longer an allowable expense.

Because Motorola recently announced the cancellation date for certain radio hardware, and because 9-1-1 PSAP funding can no longer be used to purchase radio hardware, there is a need to develop a radio equipment replacement plan. This was discussed at length last fall. A decision was made by the City Manager to add the radio purchases to the City's equipment replacement program as part of the regular 2020/2021 budget process; however, during the budget process, Motorola made a lease-purchase offer to the City of Bedford. Because the offer could have significant cost savings, the proposal is being brought before Council for consideration prior to finalizing the additions to the equipment replacement plan.

Motorola contacted the Fire Department in April 2020 regarding an equipment replacement initiative that would replace all end-user radio hardware for the City of Bedford. Motorola cited the challenging business climate associated with Covid-19 as the incentive for extending this particular offer. The proposed plan would also include the cost of programming and installation of the radios. A five-year, comprehensive warranty is included in the proposal. Typical agreements only include one-year warranties. Options exist to purchase an extended warranty; however, the cost of the upgraded warranty is substantive. Therefore, the five-year warranty included in this proposed agreement represents a notable cost savings to the City. The proposal offers a five-year lease purchase financing agreement at a competitive interest rate. The current contract with the City of North Richland Hills for service and maintenance of radio hardware would not be utilized during the five-year warranty period, which would represent an annual cost savings of $33,350, or a total of $166,750, during the Motorola warranty period, if the proposal is accepted.

The purchase of Motorola radios would not require the City to conduct a Request for Proposal (RFP) because these products are authorized for purchase within approved cooperative purchasing programs in Texas. Because the equipment is approved for purchase under the Houston-Galveston Area Council (HGAC) cooperative purchasing program, the City would expect to realize a savings of approximately 20% as compared to regular market pricing. However, because the City of Bedford has entered into an Interlocal Agreement (ILA) for purchasing with the City of Fort Worth, there are additional cost savings built into the Motorola proposal. These savings are estimated to be an additional 22% below regular market prices.

The proposed lease purchase agreement with Motorola Solutions, Inc. is a five-year, lease-purchase agreement with annual payments of $387,303.05. The offer includes 18 months, no interest and no payments (from time of agreement). The first payment would not be due until the 2022 budget year. The agreement provides for a 90-day equipment delivery period with installation beginning immediate after delivery is complete.

ATTACHMENTS:

Draft Proposal
Quotes
Existing Radio Information

AGENDA

Motorola Solutions, Inc.

Date: July 10, 2020

Financing proposal for: **City of Bedford, TX**

Communications System Financing Proposal

Motorola Solutions Credit Company LLC is pleased to submit the following proposal for the financing of your Motorola Communications equipment in accordance with the terms and conditions outlined below:

Transaction Type: Municipal Lease-Purchase Agreement

Lessor: Motorola Solutions, Inc. (or its Assignee)

Lessee: **City of Bedford, TX**

Amount: $1,849,254.29
Down Payment: $0.00
Balance to Finance: $1,849,254.29

Equipment: As per the Motorola equipment proposal.

Title: Title to the equipment will vest with the Lessee.

Insurance: Lessee will be responsible to insure the equipment as outlined in the lease contract.

Taxes: Personal property, sales, leasing, use, stamp, or other taxes are for the account of the Lessee.

First 18 months interest free

Option One

Lease Term:	Five Years
Payment Frequency:	Annual
Payment Structure:	Arrears
Lease Rate First18 months:	**0%**
Lease Rate remaining term:	2.36%
Lease Factor:	0.209437
Lease Payment:	$387,303.05 5 payments
Payment Commencement:	First payment due eighteen months from contract execution, annually thereafter.

Expiration: This interest rate is valid for all leases commenced by 7/30/2020

Qualifications: Receipt of a properly executed documentation package.

Lessee qualifies as a political subdivision or agency of the State as defined in the Internal Revenue Code of 1986. The interest portion of the Lease Payments shall be excludable from the Lessor's gross income pursuant to Section 103 of the Internal Revenue Code.

Receipt of a copy of the last years audited financial statements and current year's budget from the Lessee.

This proposal should not be construed as a commitment to finance. It is subject to final Motorola credit committee approval. This quote is based on the general level of interest rates, primarily U.S. Treasury Bills of like term maturity. Any movement in those rates in excess of 10 basis points will result in the revision of this quote.

Documentation:

- Municipal Equipment Lease Purchase Agreement
- Opinion of Counsel
- Schedule A / Equipment List
- Schedule B / Amortization Schedule
- 8038G
- UCC-1
- Certificate of Incumbency
- Statement of Essential Use/Source of Funds
- Evidence of Insurance or Statement of Self Insurance
- Resolution from governing body authorizing the execution of the Lease

Please feel free to contact me if there are any questions or if an alternate structuring is required.

Regards,
Bill Stancik
Motorola Customer Financing
847-538-4531

MOTOROLA SOLUTIONS

QUOTE-1306654
APX 4000, Qty. 58

Quote Date:07/09/2020
Expiration Date:10/07/2020
Quote Created By:
Casey Moore
Casey.Moore@
motorolasolutions.com

End Customer:
BEDFORD, CITY OF
Joey Langford

Contract: 34071 - FORT WORTH TX

Line #	Item Number	Description	Qty	List Price	Sale Price	Ext. Sale Price
	APX™ 4000 Series	APX4000				
1	H51UCF9PW6AN	APX 4000 7/800 MHZ MODEL 2 PORT	58	$1,963.00	$1,146.39	$66,490.62
1a	Q667BB	ADD: ADP ONLY (NON-P25 CAP COMPLIANT)	58	$0.00	$0.00	$0.00
1b	QA02756AB	ENH: 3600 OR 9600 TRUNKING BAUD SINGLE SYSTEM	58	$1,570.00	$916.88	$53,179.04
1c	Q887AT	ADD: 5Y ESSENTIAL SERVICE	58	$162.00	$162.00	$9,396.00
1d	QA00580AF	ADD: TDMA OPERATION	58	$450.00	$133.00	$7,714.00
2	NNTN8128BR	BATT IMPRES LIION 2000T	58	$117.00	$71.00	$4,118.00
3	PMPN4174A	CHGR DESKTOP SINGLE UNIT IMPRES, US/NA	58	$76.00	$57.00	$3,306.00
4	PMMN4062AL	AUDIO ACCESSORY-REMOTE SPEAKER MICROPHONE,IMPRES RSM, NOISE CANC. EMERGENCY BUTTON 3.5MM JACK IP54	58	$117.70	$94.16	$5,461.28

Grand Total $149,664.94(USD)

Motorola's quote is based on and subject to the terms and conditions of the valid and executed written contract between Customer and Motorola (the ""Underlying Agreement"") that authorizes Customer to purchase equipment and/or services or license software (collectively ""Products""). If no Underlying Agreement exists between Motorola and Customer, then Motorola's Standard Terms of use and Purchase Terms and Conditions govern the purchase of the Products.

MOTOROLA SOLUTIONS

QUOTE-1306654
APX 4000, Qty. 58

Notes:

- Based on DIR contract No. DIR-TSO-410. Additional Fort Worth pricing discount applied as primary user on 044A system.

Motorola's quote is based on and subject to the terms and conditions of the valid and executed written contract between Customer and Motorola (the ""Underlying Agreement"") that authorizes Customer to purchase equipment and/or services or license software (collectively ""Products""). If no Underlying Agreement exists between Motorola and Customer, then Motorola's Standard Terms of use and Purchase Terms and Conditions govern the purchase of the Products.

MOTOROLA SOLUTIONS

QUOTE-1306706
APX 6000

Quote Date:07/09/2020
Expiration Date:10/07/2020
Quote Created By:
Casey Moore
Casey.Moore@
motorolasolutions.com

End Customer:
BEDFORD, CITY OF
Joey Lankford

Line #	Item Number	Description	Qty	List Price	Sale Price	Ext. Sale Price
	APX™ 6000 Series	APX6000				
1	H98UCF9PW6BN	APX6000 700/800 MODEL 2.5 PORTABLE	125	$3,026.00	$1,767.18	$220,897.50
1a	H869BZ	ENH: MULTIKEY	125	$330.00	$192.72	$24,090.00
1b	G996AU	ADD: PROGRAMMING OVER P25 (OTAP)	125	$100.00	$58.40	$7,300.00
1c	Q361AR	ADD: P25 9600 BAUD TRUNKING	125	$300.00	$175.20	$21,900.00
1d	QA00580AC	ADD: TDMA OPERATION	125	$450.00	$133.00	$16,625.00
1e	Q887AU	ADD: 5Y ESSENTIAL SERVICE	125	$216.00	$216.00	$27,000.00
1f	H38BT	ADD: SMARTZONE OPERATION	125	$1,200.00	$700.80	$87,600.00
1g	Q806BM	ADD: ASTRO DIGITAL CAI OPERATION	125	$515.00	$300.76	$37,595.00
1h	Q629AK	ENH: AES ENCRYPTION AND ADP	125	$475.00	$277.40	$34,675.00
2	PMNN4485A	BATT IMPRES 2 LIION R IP68 2550T	125	$146.00	$89.00	$11,125.00
3	PMMN4062AL	AUDIO ACCESSORY-REMOTE SPEAKER MICROPHONE,IMPRES RSM, NOISE CANC. EMERGENCY BUTTON 3.5MM JACK IP54	125	$117.70	$94.16	$11,770.00

Motorola's quote is based on and subject to the terms and conditions of the valid and executed written contract between Customer and Motorola (the ""Underlying Agreement"") that authorizes Customer to purchase equipment and/or services or license software (collectively ""Products""). If no Underlying Agreement exists between Motorola and Customer, then Motorola's Standard Terms of use and Purchase Terms and Conditions govern the purchase of the Products.

MOTOROLA SOLUTIONS

QUOTE-1306706
APX 6000

Line #	Item Number	Description	Qty	List Price	Sale Price	Ext. Sale Price
4	NNTN8860A	CHARGER, SINGLE-UNIT, IMPRES 2, 3A, 115VAC, US/NA	125	$165.00	$123.75	$15,468.75
	APX™ 6000 Series	APX6000 XE				
5	H98UCF9PW6BN	APX6000 700/800 MODEL 2.5 PORTABLE	66	$3,026.00	$1,767.18	$116,633.88
5a	H869BZ	ENH: MULTIKEY	66	$330.00	$192.72	$12,719.52
5b	G996AU	ADD: PROGRAMMING OVER P25 (OTAP)	66	$100.00	$58.40	$3,854.40
5c	Q361AR	ADD: P25 9600 BAUD TRUNKING	66	$300.00	$175.20	$11,563.20
5d	QA02006AA	ENH: APX6000XE RUGGED RADIO	66	$800.00	$467.20	$30,835.20
5e	QA00580AC	ADD: TDMA OPERATION	66	$450.00	$133.00	$8,778.00
5f	Q887AU	ADD: 5Y ESSENTIAL SERVICE	66	$216.00	$216.00	$14,256.00
5g	H38BT	ADD: SMARTZONE OPERATION	66	$1,200.00	$700.80	$46,252.80
5h	QA01427AB	ALT: IMPACT GREEN HOUSING	66	$25.00	$14.60	$963.60
5i	Q806BM	ADD: ASTRO DIGITAL CAI OPERATION	66	$515.00	$300.76	$19,850.16
5j	Q629AK	ENH: AES ENCRYPTION AND ADP	66	$475.00	$277.40	$18,308.40
6	PMNN4547A	BATT IMPRES 2 LIION TIA4950 R IP68 3100T	66	$169.00	$126.75	$8,365.50
7	NNTN8860A	CHARGER, SINGLE-UNIT, IMPRES 2, 3A, 115VAC, US/NA	66	$165.00	$123.75	$8,167.50
8	PMMN4106D	AUDIO ACCESSORY-REMOTE SPEAKER MICROPHONE,AUDIO ACCESSORY-AUDIO ADAPTER,APX XE500 REMOTE SPEAKER MIC, HIGH IMPACT GREEN	66	$616.00	$492.80	$32,524.80
	APX™ 6000 Series	APX6000				

Motorola's quote is based on and subject to the terms and conditions of the valid and executed written contract between Customer and Motorola (the ""Underlying Agreement"") that authorizes Customer to purchase equipment and/or services or license software (collectively ""Products""). If no Underlying Agreement exists between Motorola and Customer, then Motorola's Standard Terms of use and Purchase Terms and Conditions govern the purchase of the Products.

MOTOROLA SOLUTIONS

QUOTE-1306706
APX 6000

Line #	Item Number	Description	Qty	List Price	Sale Price	Ext. Sale Price
9	PMNN4485A	BATT IMPRES 2 LIION R IP68 2550T	6	$146.00	$89.00	$534.00
10	H98KGH9PW7BN	APX6000 VHF MHZ MODEL 3.5 PORTABLE	6	$3,455.00	$2,017.72	$12,106.32
10a	Q667BB	ADD: ADP ONLY (NON-P25 CAP COMPLIANT)	6	$0.00	$0.00	$0.00
10b	Q361AR	ADD: P25 9600 BAUD TRUNKING	6	$300.00	$175.20	$1,051.20
10c	H38BT	ADD: SMARTZONE OPERATION	6	$1,200.00	$700.80	$4,204.80
10d	Q53AH	ADD: FRONT PANEL PROGRAMMING & CLONING	6	$150.00	$87.60	$525.60
10e	Q806BM	ADD: ASTRO DIGITAL CAI OPERATION	6	$515.00	$300.76	$1,804.56
10f	Q887AU	ADD: 5Y ESSENTIAL SERVICE	6	$216.00	$216.00	$1,296.00
11	PMMN4062AL	AUDIO ACCESSORY-REMOTE SPEAKER MICROPHONE,IMPRES RSM, NOISE CANC. EMERGENCY BUTTON 3.5MM JACK IP54	6	$117.70	$94.16	$564.96
12	NNTN8860A	CHARGER, SINGLE-UNIT, IMPRES 2, 3A, 115VAC, US/NA	6	$165.00	$123.75	$742.50
13	NNTN7526A	ACCESSORY KIT,MFG #:AS10-08040001	6	$43.76	$43.76	$262.56

Grand Total $872,211.71(USD)

Notes:

- Based on DIR contract No. DIR-TSO-410. Additional Fort Worth pricing discount applied as primary user on 044A system.

Motorola's quote is based on and subject to the terms and conditions of the valid and executed written contract between Customer and Motorola (the ""Underlying Agreement"") that authorizes Customer to purchase equipment and/or services or license software (collectively ""Products""). If no Underlying Agreement exists between Motorola and Customer, then Motorola's Standard Terms of use and Purchase Terms and Conditions govern the purchase of the Products.

AGENDA

MOTOROLA SOLUTIONS

QUOTE-1306779
APX 6500

Quote Date:07/09/2020
Expiration Date:10/07/2020
Quote Created By:
Casey Moore
Casey.Moore@
motorolasolutions.com

End Customer:
BEDFORD, CITY OF
Joey Lankford

Line #	Item Number	Description	Qty	List Price	Sale Price	Ext. Sale Price
	APX™ 6500 / Enh Series	ENHANCEDAPX6500				
1	M25URS9PW1BN	APX6500 ENHANCED 7/800 MHZ MOBILE	27	$2,738.00	$1,598.99	$43,172.73
1a	GA00318AF	ENH: 5 YEAR ESSENTIAL SVC	27	$334.95	$334.95	$9,043.65
1b	G831AD	ADD: SPKR 15W WATER RESISTANT	27	$60.00	$35.04	$946.08
1c	G996AS	ENH: OVER THE AIR PROVISIONING	27	$100.00	$58.40	$1,576.80
1d	GA00580AA	ADD: TDMA OPERATION	27	$450.00	$133.00	$3,591.00
1e	G51AU	ENH: SMARTZONE OPERATION APX6500	27	$1,200.00	$700.80	$18,921.60
1f	G67DT	ADD: REMOTE MOUNT E5 APXM	27	$297.00	$173.45	$4,683.15
1g	GA00179AB	ADD: NO REMOTE CABLE NEEDED APX	27	$0.00	$0.00	$0.00
1h	GA01606AA	ADD: NO GPS/WI-FI ANTENNA NEEDED	27	$0.00	$0.00	$0.00
1i	G843AH	ADD: AES ENCRYPTION AND ADP	27	$475.00	$277.40	$7,489.80
1j	G444AH	ADD: APX CONTROL HEAD SOFTWARE	27	$0.00	$0.00	$0.00
1k	G806BL	ENH: ASTRO DIGITAL CAI OP APX	27	$515.00	$300.76	$8,120.52

Motorola's quote is based on and subject to the terms and conditions of the valid and executed written contract between Customer and Motorola (the ""Underlying Agreement"") that authorizes Customer to purchase equipment and/or services or license software (collectively ""Products""). If no Underlying Agreement exists between Motorola and Customer, then Motorola's Standard Terms of use and Purchase Terms and Conditions govern the purchase of the Products.

MOTOROLA SOLUTIONS

QUOTE-1306779
APX 6500

Line #	Item Number	Description	Qty	List Price	Sale Price	Ext. Sale Price
1l	GA01670AA	ADD: APX E5 CONTROL HEAD	27	$572.00	$334.05	$9,019.35
1m	W22BA	ADD: STD PALM MICROPHONE APX	27	$72.00	$42.05	$1,135.35
1n	W969BG	ADD: MULTIKEY OPERATION	27	$330.00	$192.72	$5,203.44
1o	G361AH	ENH: P25 TRUNKING SOFTWARE APX	27	$300.00	$175.20	$4,730.40
1p	G174AD	ADD: ANT 3DB LOW-PROFILE 762-870	27	$43.00	$25.11	$677.97
2	HKN6168B	CABLE, REMOTE MOUNT, 10M	10	$74.80	$59.84	$598.40
3	HKN6169B	CABLE, REMOTE MOUNT, 5M	17	$71.39	$57.11	$970.87
	APX™ 6500 / Enh Series	ENHANCEDAPX6500				
4	M25URS9PW1BN	APX6500 ENHANCED 7/800 MHZ MOBILE	18	$2,738.00	$1,598.99	$28,781.82
4a	G90AC	ADD: NO MICROPHONE NEEDED APX	18	$0.00	$0.00	$0.00
4b	GA00318AF	ENH: 5 YEAR ESSENTIAL SVC	18	$334.95	$334.95	$6,029.10
4c	G831AD	ADD: SPKR 15W WATER RESISTANT	18	$60.00	$35.04	$630.72
4d	G72AD	ADD: APX O3 HANDHELD CH	18	$946.00	$552.46	$9,944.28
4e	G996AS	ENH: OVER THE AIR PROVISIONING	18	$100.00	$58.40	$1,051.20
4f	GA00580AA	ADD: TDMA OPERATION	18	$450.00	$133.00	$2,394.00
4g	G51AU	ENH: SMARTZONE OPERATION APX6500	18	$1,200.00	$700.80	$12,614.40
4h	G67DR	ADD: REMOTE MOUNT O3 APXM	18	$297.00	$173.45	$3,122.10
4i	GA01606AA	ADD: NO GPS/WI-FI ANTENNA NEEDED	18	$0.00	$0.00	$0.00
4j	G843AH	ADD: AES ENCRYPTION AND ADP	18	$475.00	$277.40	$4,993.20

Motorola's quote is based on and subject to the terms and conditions of the valid and executed written contract between Customer and Motorola (the ""Underlying Agreement"") that authorizes Customer to purchase equipment and/or services or license software (collectively ""Products""). If no Underlying Agreement exists between Motorola and Customer, then Motorola's Standard Terms of use and Purchase Terms and Conditions govern the purchase of the Products.

MOTOROLA SOLUTIONS

QUOTE-1306779
APX 6500

Line #	Item Number	Description	Qty	List Price	Sale Price	Ext. Sale Price
4k	G444AH	ADD: APX CONTROL HEAD SOFTWARE	18	$0.00	$0.00	$0.00
4l	G806BL	ENH: ASTRO DIGITAL CAI OP APX	18	$515.00	$300.76	$5,413.68
4m	GA01693AA	ADD : LEGACY TRUNNION SCREW KIT	18	$10.00	$5.84	$105.12
4n	W969BG	ADD: MULTIKEY OPERATION	18	$330.00	$192.72	$3,468.96
4o	G361AH	ENH: P25 TRUNKING SOFTWARE APX	18	$300.00	$175.20	$3,153.60
4p	G174AD	ADD: ANT 3DB LOW-PROFILE 762-870	18	$43.00	$25.11	$451.98
	APX™ 6500 / Enh Series	ENHANCEDAPX6500				
5	M25URS9PW1BN	APX6500 ENHANCED 7/800 MHZ MOBILE	4	$2,738.00	$1,598.99	$6,395.96
5a	G628AD	INT: REMOTE MOUNT CABLE 17 FT APX	4	$0.00	$0.00	$0.00
5b	GA00318AF	ENH: 5 YEAR ESSENTIAL SVC	4	$334.95	$334.95	$1,339.80
5c	G831AD	ADD: SPKR 15W WATER RESISTANT	4	$60.00	$35.04	$140.16
5d	G996AS	ENH: OVER THE AIR PROVISIONING	4	$100.00	$58.40	$233.60
5e	GA00580AA	ADD: TDMA OPERATION	4	$450.00	$133.00	$532.00
5f	G51AU	ENH: SMARTZONE OPERATION APX6500	4	$1,200.00	$700.80	$2,803.20
5g	G67DT	ADD: REMOTE MOUNT E5 APXM	4	$297.00	$173.45	$693.80
5h	GA01606AA	ADD: NO GPS/WI-FI ANTENNA NEEDED	4	$0.00	$0.00	$0.00
5i	G843AH	ADD: AES ENCRYPTION AND ADP	4	$475.00	$277.40	$1,109.60
5j	G444AH	ADD: APX CONTROL HEAD SOFTWARE	4	$0.00	$0.00	$0.00
5k	G806BL	ENH: ASTRO DIGITAL CAI OP APX	4	$515.00	$300.76	$1,203.04

Motorola's quote is based on and subject to the terms and conditions of the valid and executed written contract between Customer and Motorola (the ""Underlying Agreement"") that authorizes Customer to purchase equipment and/or services or license software (collectively ""Products""). If no Underlying Agreement exists between Motorola and Customer, then Motorola's Standard Terms of use and Purchase Terms and Conditions govern the purchase of the Products.

MOTOROLA SOLUTIONS

QUOTE-1306779
APX 6500

Line #	Item Number	Description	Qty	List Price	Sale Price	Ext. Sale Price
5l	GA01693AA	ADD : LEGACY TRUNNION SCREW KIT	4	$10.00	$5.84	$23.36
5m	GA01670AA	ADD: APX E5 CONTROL HEAD	4	$572.00	$334.05	$1,336.20
5n	W22BA	ADD: STD PALM MICROPHONE APX	4	$72.00	$42.05	$168.20
5o	W969BG	ADD: MULTIKEY OPERATION	4	$330.00	$192.72	$770.88
5p	G361AH	ENH: P25 TRUNKING SOFTWARE APX	4	$300.00	$175.20	$700.80
5q	G174AD	ADD: ANT 3DB LOW-PROFILE 762-870	4	$43.00	$25.11	$100.44
	APX™ 6500 / Enh Series	ENHANCEDAPX6500				
6	M25KSS9PW1BN	APX6500 ENHANCED VHF MOBILE	4	$2,738.00	$1,598.99	$6,395.96
6a	G628AD	INT: REMOTE MOUNT CABLE 17 FT APX	4	$0.00	$0.00	$0.00
6b	GA00318AF	ENH: 5 YEAR ESSENTIAL SVC	4	$334.95	$334.95	$1,339.80
6c	G831AD	ADD: SPKR 15W WATER RESISTANT	4	$60.00	$35.04	$140.16
6d	G51AU	ENH: SMARTZONE OPERATION APX6500	4	$1,200.00	$700.80	$2,803.20
6e	G67DT	ADD: REMOTE MOUNT E5 APXM	4	$297.00	$173.45	$693.80
6f	GA01606AA	ADD: NO GPS/WI-FI ANTENNA NEEDED	4	$0.00	$0.00	$0.00
6g	G843AH	ADD: AES ENCRYPTION AND ADP	4	$475.00	$277.40	$1,109.60
6h	G301AC	ADD:3BD ANT 136-174MHZ	4	$58.50	$34.16	$136.64
6i	G444AH	ADD: APX CONTROL HEAD SOFTWARE	4	$0.00	$0.00	$0.00
6j	G806BL	ENH: ASTRO DIGITAL CAI OP APX	4	$515.00	$300.76	$1,203.04
6k	GA01693AA	ADD : LEGACY TRUNNION SCREW KIT	4	$10.00	$5.84	$23.36

Motorola's quote is based on and subject to the terms and conditions of the valid and executed written contract between Customer and Motorola (the ""Underlying Agreement"") that authorizes Customer to purchase equipment and/or services or license software (collectively ""Products""). If no Underlying Agreement exists between Motorola and Customer, then Motorola's Standard Terms of use and Purchase Terms and Conditions govern the purchase of the Products.

MOTOROLA SOLUTIONS

QUOTE-1306779
APX 6500

Line #	Item Number	Description	Qty	List Price	Sale Price	Ext. Sale Price
6l	GA01670AA	ADD: APX E5 CONTROL HEAD	4	$572.00	$334.05	$1,336.20
6m	W22BA	ADD: STD PALM MICROPHONE APX	4	$72.00	$42.05	$168.20
6n	G361AH	ENH: P25 TRUNKING SOFTWARE APX	4	$300.00	$175.20	$700.80
	APX™ 6500 / Enh Series	ENHANCEDAPX6500				
7	M25QSS9PW1BN	APX6500 ENHANCED UHF R1 MOBILE	2	$2,738.00	$1,598.99	$3,197.98
7a	G628AD	INT: REMOTE MOUNT CABLE 17 FT APX	2	$0.00	$0.00	$0.00
7b	GA00318AF	ENH: 5 YEAR ESSENTIAL SVC	2	$334.95	$334.95	$669.90
7c	G831AD	ADD: SPKR 15W WATER RESISTANT	2	$60.00	$35.04	$70.08
7d	G444AH	ADD: APX CONTROL HEAD SOFTWARE	2	$0.00	$0.00	$0.00
7e	G428AD	ADD: ANT 3.5DB 450-470 MHZ	2	$50.00	$29.20	$58.40
7f	G806BL	ENH: ASTRO DIGITAL CAI OP APX	2	$515.00	$300.76	$601.52
7g	G51AU	ENH: SMARTZONE OPERATION APX6500	2	$1,200.00	$700.80	$1,401.60
7h	GA01670AA	ADD: APX E5 CONTROL HEAD	2	$572.00	$334.05	$668.10
7i	W22BA	ADD: STD PALM MICROPHONE APX	2	$72.00	$42.05	$84.10
7j	G67DT	ADD: REMOTE MOUNT E5 APXM	2	$297.00	$173.45	$346.90
7k	G193AK	ADD: ADP ONLY (NON-P25 CAP COMPLIANT)	2	$0.00	$0.00	$0.00
7l	GA01606AA	ADD: NO GPS/WI-FI ANTENNA NEEDED	2	$0.00	$0.00	$0.00
7m	G361AH	ENH: P25 TRUNKING SOFTWARE APX	2	$300.00	$175.20	$350.40
	APX™ 6500 / Enh Series	ENHANCEDAPX6500				

Motorola's quote is based on and subject to the terms and conditions of the valid and executed written contract between Customer and Motorola (the ""Underlying Agreement"") that authorizes Customer to purchase equipment and/or services or license software (collectively ""Products""). If no Underlying Agreement exists between Motorola and Customer, then Motorola's Standard Terms of use and Purchase Terms and Conditions govern the purchase of the Products.

MOTOROLA SOLUTIONS

QUOTE-1306779
APX 6500

Line #	Item Number	Description	Qty	List Price	Sale Price	Ext. Sale Price
8	M25URS9PW1BN	APX6500 ENHANCED 7/800 MHZ MOBILE	31	$2,738.00	$1,598.99	$49,568.69
8a	G628AD	INT: REMOTE MOUNT CABLE 17 FT APX	31	$0.00	$0.00	$0.00
8b	GA00318AF	ENH: 5 YEAR ESSENTIAL SVC	31	$334.95	$334.95	$10,383.45
8c	G831AD	ADD: SPKR 15W WATER RESISTANT	31	$60.00	$35.04	$1,086.24
8d	G996AS	ENH: OVER THE AIR PROVISIONING	31	$100.00	$58.40	$1,810.40
8e	GA00580AA	ADD: TDMA OPERATION	31	$450.00	$133.00	$4,123.00
8f	G51AU	ENH: SMARTZONE OPERATION APX6500	31	$1,200.00	$700.80	$21,724.80
8g	G67DT	ADD: REMOTE MOUNT E5 APXM	31	$297.00	$173.45	$5,376.95
8h	GA01606AA	ADD: NO GPS/WI-FI ANTENNA NEEDED	31	$0.00	$0.00	$0.00
8i	G843AH	ADD: AES ENCRYPTION AND ADP	31	$475.00	$277.40	$8,599.40
8j	G444AH	ADD: APX CONTROL HEAD SOFTWARE	31	$0.00	$0.00	$0.00
8k	G806BL	ENH: ASTRO DIGITAL CAI OP APX	31	$515.00	$300.76	$9,323.56
8l	GA01670AA	ADD: APX E5 CONTROL HEAD	31	$572.00	$334.05	$10,355.55
8m	W22BA	ADD: STD PALM MICROPHONE APX	31	$72.00	$42.05	$1,303.55
8n	W969BG	ADD: MULTIKEY OPERATION	31	$330.00	$192.72	$5,974.32
8o	G361AH	ENH: P25 TRUNKING SOFTWARE APX	31	$300.00	$175.20	$5,431.20
8p	G174AD	ADD: ANT 3DB LOW-PROFILE 762-870	31	$43.00	$25.11	$778.41
	APX™ 6500 / Enh Series	ENHANCEDAPX6500				
9	M25URS9PW1BN	APX6500 ENHANCED 7/800 MHZ MOBILE	9	$2,738.00	$1,598.99	$14,390.91

Motorola's quote is based on and subject to the terms and conditions of the valid and executed written contract between Customer and Motorola (the ""Underlying Agreement"") that authorizes Customer to purchase equipment and/or services or license software (collectively ""Products""). If no Underlying Agreement exists between Motorola and Customer, then Motorola's Standard Terms of use and Purchase Terms and Conditions govern the purchase of the Products.

MOTOROLA SOLUTIONS

QUOTE-1306779
APX 6500

Line #	Item Number	Description	Qty	List Price	Sale Price	Ext. Sale Price
9a	G90AC	ADD: NO MICROPHONE NEEDED APX	9	$0.00	$0.00	$0.00
9b	GA00318AF	ENH: 5 YEAR ESSENTIAL SVC	9	$334.95	$334.95	$3,014.55
9c	G996AS	ENH: OVER THE AIR PROVISIONING	9	$100.00	$58.40	$525.60
9d	GA00580AA	ADD: TDMA OPERATION	9	$450.00	$133.00	$1,197.00
9e	G66BJ	ADD: DASH MOUNT E5 APXM	9	$125.00	$73.00	$657.00
9f	G51AU	ENH: SMARTZONE OPERATION APX6500	9	$1,200.00	$700.80	$6,307.20
9g	G142AD	ADD: NO SPEAKER APX	9	$0.00	$0.00	$0.00
9h	GA01606AA	ADD: NO GPS/WI-FI ANTENNA NEEDED	9	$0.00	$0.00	$0.00
9i	G843AH	ADD: AES ENCRYPTION AND ADP	9	$475.00	$277.40	$2,496.60
9j	G89AC	ADD: NO RF ANTENNA NEEDED	9	$0.00	$0.00	$0.00
9k	G444AH	ADD: APX CONTROL HEAD SOFTWARE	9	$0.00	$0.00	$0.00
9l	G806BL	ENH: ASTRO DIGITAL CAI OP APX	9	$515.00	$300.76	$2,706.84
9m	GA01670AA	ADD: APX E5 CONTROL HEAD	9	$572.00	$334.05	$3,006.45
9n	G361AH	ENH: P25 TRUNKING SOFTWARE APX	9	$300.00	$175.20	$1,576.80
9o	W969BG	ADD: MULTIKEY OPERATION	9	$330.00	$192.72	$1,734.48
	APX™ 6500 / Enh Series	ENHANCEDAPX6500				
10	M25URS9PW1BN	APX6500 ENHANCED 7/800 MHZ MOBILE	4	$2,738.00	$1,598.99	$6,395.96
10a	W665BF	ADD: BASE STATION OP W/PS APX	4	$70.00	$40.88	$163.52
10b	GA00318AF	ENH: 5 YEAR ESSENTIAL SVC	4	$334.95	$334.95	$1,339.80

Motorola's quote is based on and subject to the terms and conditions of the valid and executed written contract between Customer and Motorola (the ""Underlying Agreement"") that authorizes Customer to purchase equipment and/or services or license software (collectively ""Products""). If no Underlying Agreement exists between Motorola and Customer, then Motorola's Standard Terms of use and Purchase Terms and Conditions govern the purchase of the Products.

MOTOROLA SOLUTIONS

QUOTE-1306779
APX 6500

Line #	Item Number	Description	Qty	List Price	Sale Price	Ext. Sale Price
10c	G996AS	ENH: OVER THE AIR PROVISIONING	4	$100.00	$58.40	$233.60
10d	GA00580AA	ADD: TDMA OPERATION	4	$450.00	$133.00	$532.00
10e	G66BJ	ADD: DASH MOUNT E5 APXM	4	$125.00	$73.00	$292.00
10f	G51AU	ENH: SMARTZONE OPERATION APX6500	4	$1,200.00	$700.80	$2,803.20
10g	G142AD	ADD: NO SPEAKER APX	4	$0.00	$0.00	$0.00
10h	GA01606AA	ADD: NO GPS/WI-FI ANTENNA NEEDED	4	$0.00	$0.00	$0.00
10i	G843AH	ADD: AES ENCRYPTION AND ADP	4	$475.00	$277.40	$1,109.60
10j	G89AC	ADD: NO RF ANTENNA NEEDED	4	$0.00	$0.00	$0.00
10k	G444AH	ADD: APX CONTROL HEAD SOFTWARE	4	$0.00	$0.00	$0.00
10l	G806BL	ENH: ASTRO DIGITAL CAI OP APX	4	$515.00	$300.76	$1,203.04
10m	GA01670AA	ADD: APX E5 CONTROL HEAD	4	$572.00	$334.05	$1,336.20
10n	W969BG	ADD: MULTIKEY OPERATION	4	$330.00	$192.72	$770.88
10o	W382AM	ADD: CONTROL STATION DESK GCAI MIC	4	$169.00	$98.70	$394.80
10p	G361AH	ENH: P25 TRUNKING SOFTWARE APX	4	$300.00	$175.20	$700.80

Grand Total $433,814.40(USD)

Notes:

- Based on DIR contract No. DIR-TSO-410. Additional Fort Worth pricing discount applied as primary user on 044A system.

Motorola's quote is based on and subject to the terms and conditions of the valid and executed written contract between Customer and Motorola (the ""Underlying Agreement"") that authorizes Customer to purchase equipment and/or services or license software (collectively ""Products""). If no Underlying Agreement exists between Motorola and Customer, then Motorola's Standard Terms of use and Purchase Terms and Conditions govern the purchase of the Products.

MOTOROLA SOLUTIONS

QUOTE-1307043
APX 8000 XE

Quote Date:07/10/2020
Expiration Date:10/08/2020
Quote Created By:
Casey Moore
Casey.Moore@
motorolasolutions.com

End Customer:
BEDFORD, CITY OF
Joey Lankford

Line #	Item Number	Description	Qty	List Price	Sale Price	Ext. Sale Price
	APX™ 8000 Series	APX8000XE				
1	H91TGD9PW6AN	APX 8000 ALL BAND PORTABLE MODEL 2.5	11	$5,983.00	$3,494.07	$38,434.77
1a	H869BW	ENH: MULTIKEY	11	$330.00	$192.72	$2,119.92
1b	Q806CB	ADD: ASTRO DIGITAL CAI OPERATION	11	$515.00	$300.76	$3,308.36
1c	Q361AN	ADD: P25 9600 BAUD TRUNKING	11	$300.00	$175.20	$1,927.20
1d	QA02006AC	ENH: APX8000XE RUGGED RADIO	11	$800.00	$467.20	$5,139.20
1e	QA00580AA	ADD: TDMA OPERATION	11	$450.00	$133.00	$1,463.00
1f	Q887AU	ADD: 5Y ESSENTIAL SERVICE	11	$216.00	$216.00	$2,376.00
1g	H38BS	ADD: SMARTZONE OPERATION	11	$1,500.00	$876.00	$9,636.00
1h	G996AP	ADD: PROGRAMMING OVER P25 (OTAP)	11	$100.00	$58.40	$642.40
1i	Q629AH	ENH: AES ENCRYPTION AND ADP	11	$475.00	$277.40	$3,051.40
1j	QA01427AG	ALT: APX8000/XE HOUSING GREEN	11	$25.00	$14.60	$160.60
2	PMNN4504A	BATT IMPRES 2 LIION UL2054 DIV2 R IP68 3400T	11	$193.00	$105.00	$1,155.00

Motorola's quote is based on and subject to the terms and conditions of the valid and executed written contract between Customer and Motorola (the ""Underlying Agreement"") that authorizes Customer to purchase equipment and/or services or license software (collectively ""Products""). If no Underlying Agreement exists between Motorola and Customer, then Motorola's Standard Terms of use and Purchase Terms and Conditions govern the purchase of the Products.

MOTOROLA SOLUTIONS

QUOTE-1307043
APX 8000 XE

Line #	Item Number	Description	Qty	List Price	Sale Price	Ext. Sale Price
3	NNTN8860A	CHARGER, SINGLE-UNIT, IMPRES 2, 3A, 115VAC, US/NA	11	$165.00	$123.75	$1,361.25
4	PMMN4106D	AUDIO ACCESSORY-REMOTE SPEAKER MICROPHONE,AUDIO ACCESSORY-AUDIO ADAPTER,APX XE500 REMOTE SPEAKER MIC, HIGH IMPACT GREEN	11	$616.00	$492.80	$5,420.80
	APX™ 8000 Series	APX8000XE				
5	H91TGD9PW6AN	APX 8000 ALL BAND PORTABLE MODEL 2.5	22	$5,983.00	$3,494.07	$76,869.54
5a	H869BW	ENH: MULTIKEY	22	$330.00	$192.72	$4,239.84
5b	Q806CB	ADD: ASTRO DIGITAL CAI OPERATION	22	$515.00	$300.76	$6,616.72
5c	Q361AN	ADD: P25 9600 BAUD TRUNKING	22	$300.00	$175.20	$3,854.40
5d	QA02006AC	ENH: APX8000XE RUGGED RADIO	22	$800.00	$467.20	$10,278.40
5e	QA00580AA	ADD: TDMA OPERATION	22	$450.00	$133.00	$2,926.00
5f	QA05509AA	DEL: DELETE UHF BAND	22	-$800.00	-$467.20	-$10,278.40
5g	Q887AU	ADD: 5Y ESSENTIAL SERVICE	22	$216.00	$216.00	$4,752.00
5h	H38BS	ADD: SMARTZONE OPERATION	22	$1,500.00	$876.00	$19,272.00
5i	G996AP	ADD: PROGRAMMING OVER P25 (OTAP)	22	$100.00	$58.40	$1,284.80
5j	Q629AH	ENH: AES ENCRYPTION AND ADP	22	$475.00	$277.40	$6,102.80
5k	QA01427AG	ALT: APX8000/XE HOUSING GREEN	22	$25.00	$14.60	$321.20
6	PMNN4504A	BATT IMPRES 2 LIION UL2054 DIV2 R IP68 3400T	22	$193.00	$105.00	$2,310.00
7	NNTN8860A	CHARGER, SINGLE-UNIT, IMPRES 2, 3A, 115VAC, US/NA	22	$165.00	$123.75	$2,722.50

Motorola's quote is based on and subject to the terms and conditions of the valid and executed written contract between Customer and Motorola (the ""Underlying Agreement"") that authorizes Customer to purchase equipment and/or services or license software (collectively ""Products""). If no Underlying Agreement exists between Motorola and Customer, then Motorola's Standard Terms of use and Purchase Terms and Conditions govern the purchase of the Products.

MOTOROLA SOLUTIONS

QUOTE-1307043
APX 8000 XE

Line #	Item Number	Description	Qty	List Price	Sale Price	Ext. Sale Price
8	PMMN4106D	AUDIO ACCESSORY-REMOTE SPEAKER MICROPHONE,AUDIO ACCESSORY-AUDIO ADAPTER,APX XE500 REMOTE SPEAKER MIC, HIGH IMPACT GREEN	22	$616.00	$492.80	$10,841.60

Grand Total $218,309.30(USD)

Notes:

- Based on DIR contract No. DIR-TSO-410. Additional Fort Worth pricing discount applied as primary user on 044A system.

Motorola's quote is based on and subject to the terms and conditions of the valid and executed written contract between Customer and Motorola (the ""Underlying Agreement"") that authorizes Customer to purchase equipment and/or services or license software (collectively ""Products""). If no Underlying Agreement exists between Motorola and Customer, then Motorola's Standard Terms of use and Purchase Terms and Conditions govern the purchase of the Products.

MOTOROLA SOLUTIONS

QUOTE-1307121
APX 8500 and Consolettes

Quote Date:07/10/2020
Expiration Date:10/08/2020
Quote Created By:
Casey Moore
Casey.Moore@
motorolasolutions.com

End Customer:
BEDFORD, CITY OF
Joey Lankford

Line #	Item Number	Description	Qty	List Price	Sale Price	Ext. Sale Price
1	M37TSS9PW1AN	APX8500 ALL BAND MP MOBILE	5	$4,770.00	$2,785.68	$13,928.40
1a	GA00318AF	ENH: 5 YEAR ESSENTIAL SVC	5	$334.95	$334.95	$1,674.75
1b	G831AD	ADD: SPKR 15W WATER RESISTANT	5	$60.00	$35.04	$175.20
1c	G996AS	ENH: OVER THE AIR PROVISIONING	5	$100.00	$58.40	$292.00
1d	GA01513AB	ADD: ALL BAND MOBILE ANTENNA (7/8/V/U)	5	$95.00	$55.48	$277.40
1e	GA00580AA	ADD: TDMA OPERATION	5	$450.00	$133.00	$665.00
1f	G51AT	ENH:SMARTZONE	5	$1,500.00	$876.00	$4,380.00
1g	GA05509AA	DEL: DELETE UHF BAND	5	-$800.00	-$467.20	-$2,336.00
1h	GA01606AA	ADD: NO GPS/WI-FI ANTENNA NEEDED	5	$0.00	$0.00	$0.00
1i	G843AH	ADD: AES ENCRYPTION AND ADP	5	$475.00	$277.40	$1,387.00
1j	G444AH	ADD: APX CONTROL HEAD SOFTWARE	5	$0.00	$0.00	$0.00
1k	G67EH	ADD: REMOTE MOUNT E5 MP	5	$297.00	$173.45	$867.25
1l	GA01517AA	DEL: NO J600 ADAPTER CABLE NEEDED	5	$0.00	$0.00	$0.00

Motorola's quote is based on and subject to the terms and conditions of the valid and executed written contract between Customer and Motorola (the ""Underlying Agreement"") that authorizes Customer to purchase equipment and/or services or license software (collectively ""Products""). If no Underlying Agreement exists between Motorola and Customer, then Motorola's Standard Terms of use and Purchase Terms and Conditions govern the purchase of the Products.

MOTOROLA SOLUTIONS

QUOTE-1307121
APX 8500 and Consolettes

Line #	Item Number	Description	Qty	List Price	Sale Price	Ext. Sale Price
1m	G806BL	ENH: ASTRO DIGITAL CAI OP APX	5	$515.00	$300.76	$1,503.80
1n	GA01670AA	ADD: APX E5 CONTROL HEAD	5	$572.00	$334.05	$1,670.25
1o	W22BA	ADD: STD PALM MICROPHONE APX	5	$72.00	$42.05	$210.25
1p	W969BG	ADD: MULTIKEY OPERATION	5	$330.00	$192.72	$963.60
1q	G361AH	ENH: P25 TRUNKING SOFTWARE APX	5	$300.00	$175.20	$876.00
2	M37TSS9PW1AN	APX8500 ALL BAND MP MOBILE	3	$4,770.00	$2,785.68	$8,357.04
2a	GA00318AF	ENH: 5 YEAR ESSENTIAL SVC	3	$334.95	$334.95	$1,004.85
2b	G831AD	ADD: SPKR 15W WATER RESISTANT	3	$60.00	$35.04	$105.12
2c	G996AS	ENH: OVER THE AIR PROVISIONING	3	$100.00	$58.40	$175.20
2d	GA01513AB	ADD: ALL BAND MOBILE ANTENNA (7/8/V/U)	3	$95.00	$55.48	$166.44
2e	GA00580AA	ADD: TDMA OPERATION	3	$450.00	$0.00	$0.00
2f	G51AT	ENH:SMARTZONE	3	$1,500.00	$876.00	$2,628.00
2g	GA01606AA	ADD: NO GPS/WI-FI ANTENNA NEEDED	3	$0.00	$0.00	$0.00
2h	G843AH	ADD: AES ENCRYPTION AND ADP	3	$475.00	$277.40	$832.20
2i	G444AH	ADD: APX CONTROL HEAD SOFTWARE	3	$0.00	$0.00	$0.00
2j	G67EH	ADD: REMOTE MOUNT E5 MP	3	$297.00	$173.45	$520.35
2k	GA01517AA	DEL: NO J600 ADAPTER CABLE NEEDED	3	$0.00	$0.00	$0.00
2l	G806BL	ENH: ASTRO DIGITAL CAI OP APX	3	$515.00	$300.76	$902.28
2m	GA01670AA	ADD: APX E5 CONTROL HEAD	3	$572.00	$334.05	$1,002.15

Motorola's quote is based on and subject to the terms and conditions of the valid and executed written contract between Customer and Motorola (the ""Underlying Agreement"") that authorizes Customer to purchase equipment and/or services or license software (collectively ""Products""). If no Underlying Agreement exists between Motorola and Customer, then Motorola's Standard Terms of use and Purchase Terms and Conditions govern the purchase of the Products.

MOTOROLA SOLUTIONS

QUOTE-1307121
APX 8500 and Consolettes

Line #	Item Number	Description	Qty	List Price	Sale Price	Ext. Sale Price
2n	W22BA	ADD: STD PALM MICROPHONE APX	3	$72.00	$42.05	$126.15
2o	W969BG	ADD: MULTIKEY OPERATION	3	$330.00	$192.72	$578.16
2p	G361AH	ENH: P25 TRUNKING SOFTWARE APX	3	$300.00	$175.20	$525.60
2q	GA05508AA	DEL: DELETE VHF BAND	3	-$800.00	-$467.20	-$1,401.60
3	L30URS9PW1AN	APX CONSOLETTE 7/800	7	$4,554.00	$2,659.54	$18,616.78
3a	L999AC	ADD: FULL FP W/05/KEYPAD/ CLOCK/VU	7	$789.00	$460.78	$3,225.46
3b	GA00318AB	ADD: 5Y ESSENTIAL SERVICE	7	$319.00	$319.00	$2,233.00
3c	G90AC	ADD: NO MICROPHONE NEEDED APX	7	$0.00	$0.00	$0.00
3d	G996AS	ENH: OVER THE AIR PROVISIONING	7	$100.00	$58.40	$408.80
3e	G806BE	ADD: ASTRO DIGITAL CAI OPERATION	7	$515.00	$300.76	$2,105.32
3f	GA00580AA	ADD: TDMA OPERATION	7	$450.00	$133.00	$931.00
3g	CA01598AB	ADD: AC LINE CORD US	7	$0.00	$0.00	$0.00
3h	G51AT	ENH:SMARTZONE	7	$1,500.00	$876.00	$6,132.00
3i	G843AH	ADD: AES ENCRYPTION AND ADP	7	$475.00	$277.40	$1,941.80
3j	GA00244AA	ADD: 7/800MHZ PRIMARY BAND	7	$0.00	$0.00	$0.00
3k	G444AE	ADD: APX CONTROL HEAD SOFTWARE	7	$0.00	$0.00	$0.00
3l	W969BG	ADD: MULTIKEY OPERATION	7	$330.00	$192.72	$1,349.04
3m	G361AH	ENH: P25 TRUNKING SOFTWARE APX	7	$300.00	$175.20	$1,226.40
4	HKN6233C	APX CONSOLETTE RACK MOUNT KIT	7	$200.00	$116.80	$817.60

Grand Total $81,044.04(USD)

Motorola's quote is based on and subject to the terms and conditions of the valid and executed written contract between Customer and Motorola (the ""Underlying Agreement"") that authorizes Customer to purchase equipment and/or services or license software (collectively ""Products""). If no Underlying Agreement exists between Motorola and Customer, then Motorola's Standard Terms of use and Purchase Terms and Conditions govern the purchase of the Products.

Notes:

- Based on DIR contract No. DIR-TSO-410. Additional Fort Worth pricing discount applied as primary user on 044A system.

Motorola's quote is based on and subject to the terms and conditions of the valid and executed written contract between Customer and Motorola (the ""Underlying Agreement"") that authorizes Customer to purchase equipment and/or services or license software (collectively ""Products""). If no Underlying Agreement exists between Motorola and Customer, then Motorola's Standard Terms of use and Purchase Terms and Conditions govern the purchase of the Products.

MOTOROLA SOLUTIONS

QUOTE-1307139

Quote Date:07/10/2020
Expiration Date:10/08/2020
Quote Created By:
Casey Moore
Casey.Moore@
motorolasolutions.com

End Customer:
BEDFORD, CITY OF
Joey Lankford

Line #	Item Number	Description	Qty	List Price	Sale Price	Ext. Sale Price
1	LSV00Q00202A	DEVICE PROGRAMMING	1	$49,720.00	$49,720.00	$49,720.00
2	LSV00Q00203A	DEVICE INSTALLATION	1	$44,490.00	$44,490.00	$44,490.00

Grand Total $94,210.00(USD)

Notes:

- DIR Contract No. DIR-TSO-4101.

  This quote is for installation and programming of the radios included in the following quotes:

  1306654
  1306706
  1306779
  1307043
  1307121

Motorola's quote is based on and subject to the terms and conditions of the valid and executed written contract between Customer and Motorola (the ""Underlying Agreement"") that authorizes Customer to purchase equipment and/or services or license software (collectively ""Products""). If no Underlying Agreement exists between Motorola and Customer, then Motorola's Standard Terms of use and Purchase Terms and Conditions govern the purchase of the Products.

Existing Radios Being Replaed - Type and End of Support Information

AGENDA

Radio Model	Radio Type	Quantity	% of Fleet	Cancellation	End of Support
APX 6000 AN	Portable	208	52%	12/31/2016	12/31/2023
APX 6500 AN	Mobile	38	9%	7/31/2020	9/30/2025
APX 7000	Portable	2	0%	5/18/2018	6/30/2023
APX 7000 XE	Portable	2	0%	5/18/2018	6/30/2023
APX 7500	Mobile	9	2%	6/1/2017	9/30/2022
APX 7500 Consolette	Consolette	5	1%	6/1/2017	9/30/2022
XTL 1500	Mobile	9	2%	10/31/2014	12/31/2019
XTL 2500	Mobile	5	1%	10/31/2014	12/31/2019
XTL 5000	Mobile	46	11%	11/30/2013	12/31/2018
XTL 5000 Consolette	Consolette	2	0%	11/30/2013	12/31/2018
XTS 1500	Portable	25	6%	10/31/2014	12/31/2019
XTS 2500	Portable	32	8%	10/31/2014	12/31/2019
XTS 5000	Portable	19	5%	11/30/2013	12/31/2018
	TOTAL	**402**			

New Radios

Quotes	
APX 4000	$ 149,664.94
APX 6000	$ 872,211.71
APX 6500	$ 433,814.30
APX 8000	$ 218,309.30
APX 8500 and Consolett	$ 81,044.04
Install and Programming	$94,210
TOTAL	**$ 1,849,254.29**

Consolette	7
Mobile	107
Portable	288
TOTAL	402

MODEL NAME	TYPE	QUANTITY
APX 4000	Portable	58
APX 6000 BN	Portable	131
APX 6000 XE	Portable	66
APX 6500 BN	Mobile	71
APX 6500 BN EOC	Mobile	4
APX 6500 BN O3	Mobile	18
APX 6500 UHF	Mobile	2
APX 6500 VHF	Mobile	4
APX 8000 XE Dual	Portable	22
APX 8000 XE Tri	Portable	11
APX 8500 7/8/U	Mobile	3
APX 8500 7/8/V	Mobile	5
APX Consolette	Consolette	7
TOTAL		**402**

AGENDA

Row Labels	Sum of Quantity	
Building	**6**	
APX 4000	6	
Finance	**2**	
APX 4000	2	
Fire Department	**126**	
APX 6500 BN	27	
APX 8000 XE Tri	11	
APX 8000 XE Dual	22	
APX 6000 XE	66	
MCP	**18**	
APX 6500 BN	4	These are in the MCP
APX 8500 7/8/V	5	
APX 8500 7/8/	3	No antenna, no power supply, control station, replacing 6500 AN
APX 6500 VHF	4	No antennas, no power supply, replacing APX 7500
APX 6500 UHF	2	No antennas, no power supply, replacing APX 7500
Neighborhood Servic	**3**	
APX 4000	3	
Parks & Events	**15**	
APX 4000	15	
Police Department	**174**	
APX 6000 BN	125	
APX 6500 BN	31	
APX 6500 BN O3	18	14 are for CID
Public Works	**27**	
APX 4000	27	
System	**16**	
APX 4000	5	
APX Consolette	7	
APX 6500 BN E	4	Control Stations, replacing existing control stations, no power supply, no
Logging	**9**	
APX 6500 BN	9	No Antenna, dash mount, no speaker
Misc VHF	**6**	
APX 6000 BN	6	No OTAP, No TDMA, ADP Encryption Only
Grand Total	**402**	

INSTALLATION AND PROGRAMMING COSTS				
INSTALLATION	**QTY**	**COMMENTS**	**UNIT PRICE**	**TOTAL**
FD Mobiles	5	Assumes all Fire Apparatus for now, need to update to reflect correct vehicle types	$650	$3,250
FD Mobiles	17	Admin	$350	$5,950
FD Mobiles	5	EMS	$550	$2,750
PD Mobiles	49	Standard	$350	$17,150
Control Stations	38	18 MCP, 4 EOC, 9 Logging, 7 Consolettes, replacing existing control station, reuse power supply and antennas. Confirming price with Crosspoint	$225	$8,550
Removal	114		$60	$6,840
			SUB-TOTAL	$44,490
PROGRAMMING				
All radios	402		$110	$44,220
Modify Templates	10		$550	$5,500
			SUB-TOTAL	$49,720
			TOTAL	**$94,210**

Row Labels	Sum of Quantity
Consolette	7
Mobile	107
Portable	288
Grand Total	**402**

Quotes	
APX 4000	$ 149,664.94
APX 6000	$ 872,211.71
APX 6500	$ 433,814.30
APX 8000	$ 218,309.30
APX 8500 and Consolet	$ 81,044.04
Install and Programmin	$94,210
	$ 1,849,254.29

NEW RADIOS

Row Labels	Sum of Quantity
APX 4000	58
APX 6000 BN	131
APX 6000 XE	66
APX 6500 BN	71
APX 6500 BN EOC	4
APX 6500 BN O3	18
APX 6500 UHF	2
APX 6500 VHF	4
APX 8000 XE Dual	22
APX 8000 XE Tri	11
APX 8500 7/8/U	3
APX 8500 7/8/V	5
APX Consolette	7
Grand Total	**402**

AGENDA

Department	Model Name	Mobile / Portable	Quantity	Bands	Quote Name	Comm
Public Works	APX 4000	Portable	27	Single	APX 4000	
Parks & Events	APX 4000	Portable	15	Single	APX 4000	
Building	APX 4000	Portable	6	Single	APX 4000	
Neighborhood Services	APX 4000	Portable	3	Single	APX 4000	
System	APX 6500 BN EOC	Mobile	4	Single	APX 6500	APX 6500 BN EOC
System	APX 4000	Portable	5	Single	APX 4000	
System	APX Consolette	Consolette	7	Single		
Finance	APX 4000	Portable	2	Single	APX 4000	
Fire Department	APX 6500 BN	Mobile	27	Single	APX 6500	17 admin vehicles (17 ft cable), 10 Fire / EMS (30 ft cable)
Fire Department	APX 8000 XE Tri	Portable	11	Tri	APX 8000	Green radios with green XE 500 RSMs
Fire Department	APX 8000 XE Dual	Portable	22	Dual	APX 8000	Green radios with green XE 500 RSMs
Fire Department	APX 6000 XE	Portable	66	Single	APX 6000	Green radios with green XE 500 RSMs
MCP	APX 8500 7/8/V	Mobile	5	Dual	APX 8500 and Consolettes	
MCP	APX 8500 7/8/U	Mobile	3	Dual	APX 8500 and Consolettes	
MCP	APX 6500 BN	Mobile	4	Single	APX 6500	7/800 MHz
MCP	APX 6500 VHF	Mobile	4	Single	APX 6500	
MCP	APX 6500 UHF	Mobile	2	Single	APX 6500	
Police Department	APX 6500 BN O3	Mobile	18	Single	APX 6500	03 Head, 14 for CID, 4 for PD
Police Department	APX 6500 BN	Mobile	31	Single	APX 6500	
Police Department	APX 6000 BN	Portable	125	Single	APX 6000	
Misc VHF	APX 6000 BN	Portable	6	Single	APX 6000	VHF with FPP
Logging	APX 6500 BN	Mobile	9	Single	APX 6500	No Antenna, dash mount, no speaker

Row Labels	Sum of Quantity
APX 4000	
APX 4000	58
(blank)	
APX 8500 7/8/U	3
APX 8500 7/8/V	5
APX Consolette	7
APX 6000	
APX 6000 BN	131
APX 6000 XE	66
APX 6500	
APX 6500 BN	71
APX 6500 BN EOC	4
APX 6500 BN O3	18
APX 6500 UHF	2
APX 6500 VHF	4
APX 8000	
APX 8000 XE Dual	22
APX 8000 XE Tri	11
Grand Total	**402**

PMMN4106

AGENDA

Row Labels	Count of Model Name
APX 6500 AN	38
APX 7000	2
APX 7500	14
APX 7500 Consolett	5
XTL 1500	9
XTL 2500	5
XTL 5000	46
XTL 5000 Consolett	4
XTS 1500	25
XTS 2500	32
XTS 5000	19
APX 7000 XE	2
APX 6000 AN	208
APX 4000	18
Grand Total	**427**

ount of Model Nan	Column Labels														
Row Labels	**APX 6500 AN**	**APX 7000**	**APX 7500**	**X 7500 Console**	**XTL 1500**	**XTL 2500**	**XTL 5000**	**XTL 5000**	**XTS 1500**	**XTS 2500**	**XTS 5000**	**APX 7000 XE**	**APX 6000**	**APX 4000**	**Grand Total**
Building										5			1	1	7
Finance										2					2
Fire Department	18						9			1	17	2	79		126
MCP	7		8				3								18
eighborhood Services										3					3
Parks & Events										15					15
Police Department	9	2	1			5	34			1	2		120		174
Public Works									25	2				17	44
System	4			5	9			4		3			2		27
MISC													6		6
Former Motorcycle			5												5
Grand Total	**38**	**2**	**14**	**5**	**9**	**5**	**46**	**4**	**25**	**32**	**19**	**2**	**208**	**18**	**427**

Replace	Y

nt of Mobile / Port	Column Labels																
	Consolette		**Consolette Total**	**Mobile**					**Mobile Total**	**Portable**							
Row Labels	**APX 7500 Consolette**	**XTL 5000 Consolette**		**APX 6500 AN**	**APX 7500**	**XTL 1500**	**XTL 2500**	**XTL 5000**		**APX 6000 AN**	**APX 7000**	**APX 7000 XE**	**XTS 1500**	**XTS 2500**	**XTS 5000**	**Portable Total**	**Grand Total**
Building										1				5		6	6
Finance														2		2	2
Fire Department				18				9	27	79		2		1	17	99	126
MCP				7	8			3	18								18
eighborhood Services														3		3	3
Parks & Events														15		15	15
Police Department				9	1		5	34	49	120	2			1	2	125	174
Public Works													25	2		27	27
System	5	2	7	4		9			13	2				3		5	25
MISC										6						6	6
Grand Total	**5**	**2**	**7**	**38**	**9**	**9**	**5**	**46**	**107**	**208**	**2**	**2**	**25**	**32**	**19**	**288**	**402**

Row Labels	Count of Replace
N	25
Y	402
Grand Total	**427**

Row Labels	Count of Mobile / Portable
Consolette	9
Mobile	112
Portable	306
Grand Total	**427**

	Values	
Row Labels	**Max of Cancellation**	**Max of End of Support**
APX 4000		
APX 6000 AN	12/31/2016	12/31/2023
APX 6500 AN	7/31/2020	9/30/2025
APX 7000	5/18/2018	6/30/2023
APX 7000 XE	5/18/2018	6/30/2023
APX 7500	6/1/2017	9/30/2022
APX 7500 Consolet	6/1/2017	9/30/2022
XTL 1500	10/31/2014	12/31/2019
XTL 2500	10/31/2014	12/31/2019
XTL 5000	11/30/2013	12/31/2018
XTL 5000 Consolet	11/30/2013	12/31/2018
XTS 1500	10/31/2014	12/31/2019
XTS 2500	10/31/2014	12/31/2019
XTS 5000	11/30/2013	12/31/2018
Grand Total	**44043**	**45930**

		Quantities	% of Fleet	Cancellation	End of Support
APX 6000 AN	Portable	208	52%	31-Dec-16	31-Dec-23
APX 6500 AN	Mobile	38	9%	31-Jul-20	30-Sep-25
APX 7000	Portable	2	0%	18-May-18	30-Jun-23
APX 7000 XE	Portable	2	0%	18-May-18	30-Jun-23
APX 7500	Mobile	9	2%	1-Jun-17	30-Sep-22
APX 7500 Consolett	Control Station	5	1%	1-Jun-17	30-Sep-22
XTL 1500	Mobile	9	2%	31-Oct-14	31-Dec-19
XTL 2500	Mobile	5	1%	31-Oct-14	31-Dec-19
XTL 5000	Mobile	46	11%	30-Nov-13	31-Dec-18
XTL 5000 Consolett	Control Station	2	0%	30-Nov-13	31-Dec-18
XTS 1500	Portable	25	6%	31-Oct-14	31-Dec-19
XTS 2500	Portable	32	8%	31-Oct-14	31-Dec-19
XTS 5000	Portable	19	5%	30-Nov-13	31-Dec-18
	TOTAL	**402**			

AGENDA

Department	Assigned To	Model Number	Model Name	Unit ID	Serial Number	Mobile / Portable	Cancellation	End of Support	Replace	Comments
Parks & Events	BEDPRK-HARTNET	H46UCD9PW5BN	XTS 2500	7208293	205CMX2453	Portable	31-Oct-14	31-De		
Parks & Events	BEDPRK-MICKNHIME	H46UCD9PW5BN	XTS 2500	7208298	205CMX2454	Portable	31-Oct-14	31-De		
Parks & Events	BEDPRK-NICHOLAS	H46UCD9PW5BN	XTS 2500	7208292	205CMX2455	Portable	31-Oct-14	31-Dec-19	Y	
Parks & Events	BEDPRK-HENDERSON	H46UCD9PW5BN	XTS 2500	7208289	205CMX2457	Portable	31-Oct-14	31-Dec-19	Y	
Parks & Events	BEDPRK-EUDY	H46UCD9PW5BN	XTS 2500	7208284	205CMX2458	Portable	31-Oct-14	31-Dec-19	Y	
Parks & Events	BEDPRK-COPPOLA	H46UCD9PW5BN	XTS 2500	7208287	205CMX2459	Portable	31-Oct-14	31-Dec-19	Y	
Parks & Events	BEDPRK-REED	H46UCD9PW5BN	XTS 2500	7208290	205CMX2462	Portable	31-Oct-14	31-Dec-19	Y	
Parks & Events	BEDPRK-SISCO	H46UCD9PW5BN	XTS 2500	7208295	205CMX2463	Portable	31-Oct-14	31-Dec-19	Y	
Parks & Events	BEDPRK-SCOTT	H46UCD9PW5BN	XTS 2500	7208296	205CMX2464	Portable	31-Oct-14	31-Dec-19	Y	
Parks & Events	BEDPRK-MIRANDA	H46UCD9PW5BN	XTS 2500	7208299	205CMX2465	Portable	31-Oct-14	31-Dec-19	Y	
Parks & Events	BEDPRK-LANDERS	H46UCD9PW5BN	XTS 2500	7208294	205CMX2466	Portable	31-Oct-14	31-Dec-19	Y	
Parks & Events	BEDPRK-BASKIN	H46UCD9PW5BN	XTS 2500	7208285	205CMX2467	Portable	31-Oct-14	31-Dec-19	Y	
Parks & Events	BEDPRK-SKINNER	H46UCD9PW5BN	XTS 2500	7208297	205CMX2468	Portable	31-Oct-14	31-Dec-19	Y	
Parks & Events	BEDPRK-SMASAL	H46UCD9PW5BN	XTS 2500	7208288	205CMX2469	Portable	31-Oct-14	31-Dec-19	Y	
Parks & Events	BEDPRK-LESLIE	H46UCD9PW5BN	XTS 2500	7208286	205CMX2478	Portable	31-Oct-14	31-Dec-19	Y	
Building	BEDB-J-HINZDO	H46UCD9PW5BN	XTS 2500	7208302	205CMX2470	Portable	31-Oct-14	31-Dec-19	Y	
Building	BEDB-T-PETERSON	H46UCD9PW5BN	XTS 2500	7208303	205CMX2471	Portable	31-Oct-14	31-Dec-19	Y	
Building	BEDB-C-NADIN	H46UCD9PW5BN	XTS 2500	7208301	205CMX2472	Portable	31-Oct-14	31-Dec-19	Y	
Building	BEDB-P-M-HAWKINS	H46UCD9PW5BN	XTS 2500	7208305	205CMX2473	Portable	31-Oct-14	31-Dec-19	Y	
Building	BEDC-M.Briggs	H51UCF9PW6AN	APX 4000	7218651	426CRX2082	Portable			N	
Building	BEDB-J-SISCO	H46UCD9PW5BN	XTS 2500	7208304	205CMX2481	Portable	31-Oct-14	31-Dec-19	Y	
Building	BEDF-R-Hines	H98UCF9PW6AN	APX 6000 AN	7208127	481CPK2851	Portable	31-Dec-16	31-Dec-23	Y	
Finance	BEDAD-K-AGAN	H46UCD9PW5BN	XTS 2500	7208281	205CMX2479	Portable	31-Oct-14	31-Dec-19	Y	
Finance	BEDAD-R-GIBSON	H46UCD9PW5BN	XTS 2500	7208282	205CMX2480	Portable	31-Oct-14	31-Dec-19	Y	
Neighborhood Services	BEDC-S-PRUETT	H46UCD9PW5BN	XTS 2500	7208291	205CMX2474	Portable	31-Oct-14	31-Dec-19	Y	
Neighborhood Services	BEDC-S Caruso	H46UCD9PW5BN	XTS 2500	7208283	205CMX2475	Portable	31-Oct-14	31-Dec-19	Y	
Neighborhood Services	BEDC-B-McClendon	H46UCD9PW5BN	XTS 2500	7208280	205CMX2477	Portable	31-Oct-14	31-Dec-19	Y	
System	BED-TRAF-LOG	M28URS9PW1AN	XTL 1500	7218632	775CPH0017	Mobile	31-Oct-14	31-Dec-19	Y	
System	BED-MISC-LOG	M28URS9PW1AN	XTL 1500	7218634	775CPH0018	Mobile	31-Oct-14	31-Dec-19	Y	
System	BED-PATRL2-LOG	M28URS9PW1AN	XTL 1500	7218630	775CPH0019	Mobile	31-Oct-14	31-Dec-19	Y	
System	BED-ALARM-LOG	M28URS9PW1AN	XTL 1500	7218626	775CPH0020	Mobile	31-Oct-14	31-Dec-19	Y	
System	BED-PATRL1-LOG	M28URS9PW1AN	XTL 1500	7218629	775CPH0021	Mobile	31-Oct-14	31-Dec-19	Y	
System	BED-FIRE2-LOG	M28URS9PW1AN	XTL 1500	7218627	775CPH0022	Mobile	31-Oct-14	31-Dec-19	Y	
System	BED-TACT-LOG	M28URS9PW1AN	XTL 1500	7218631	775CPH0023	Mobile	31-Oct-14	31-Dec-19	Y	
System	BED-VIPS-LOG	M28URS9PW1AN	XTL 1500	7218633	775CPH0024	Mobile	31-Oct-14	31-Dec-19	Y	
System	BED-FIRE3-LOG	M28URS9PW1AN	XTL 1500	7218628	775CPH0025	Mobile	31-Oct-14	31-Dec-19	Y	
System	BEDF-STA1-TA	L30URS9PW1AN	APX 7500 Consolette	7208104	761CNF0092	Consolette	1-Jun-17	30-Sep-22	Y	
System	BEDF-STA3-ALERT	L30URS9PW1AN	APX 7500 Consolette	7208249	761CNK0337	Consolette	1-Jun-17	30-Sep-22	Y	
System	BEDF-STA2-ALERT	L30URS9PW1AN	APX 7500 Consolette	7208248	761CNK0338	Consolette	1-Jun-17	30-Sep-22	Y	
System	BEDF-STA3-REMOT	L30URS9PW1AN	APX 7500 Consolette	7208267	761CPD0319	Consolette	1-Jun-17	30-Sep-22	Y	
System	BED-Interop-BU	L30URS9PW1AN	APX 7500 Consolette	7208268	761CPH0040	Consolette	1-Jun-17	30-Sep-22	Y	
System	BED-Disp-Patrol	H98UCF9PW6AN	APX 6000 AN	7208245	481CMX2026	Portable	31-Dec-16	31-Dec-23	Y	
System	BED-Disp-Fire	H98UCF9PW6AN	APX 6000 AN	7208246	481CMX2027	Portable	31-Dec-16	31-Dec-23	Y	
System	BED-Fire-BU	L20URS9PW1AN	XTL 5000 Consolette	7208265	276CJF0129	Consolette	30-Nov-13	31-Dec-18	N	TC911 approved replacing
System	BED-Ptrl-BU	L20URS9PW1AN	XTL 5000 Consolette	7208264	276CJF0130	Consolette	30-Nov-13	31-Dec-18	N	TC911 approved replacing
System	BEDF-STA2-TALK	L20URS9PW1AN	XTL 5000 Consolette	7208243	276CJF0135	Consolette	30-Nov-13	31-Dec-18	Y	
System	BEDF-STA1-REMOT	L20URS9PW1AN	XTL 5000 Consolette	7208105	276CNM0396	Consolette	30-Nov-13	31-Dec-18	Y	
System	BEDF-STA-1-LT	H46UCF9PW6BN	XTS 2500	7208078	205CJD5483	Portable	31-Oct-14	31-Dec-19	Y	
System	BEDF-Sta-2-Lt	H46UCF9PW6BN	XTS 2500	7207984	205CKF1194	Portable	31-Oct-14	31-Dec-19	Y	
System	BEDF-HEB	H46UCF9PW6BN	XTS 2500	7218652	205CLF7758	Portable	31-Oct-14	31-Dec-19	Y	
System	BED EOC 3	M25URS9PW1AN	APX 6500 AN	7208262	527CPZ0093	Mobile	31-Jul-20	30-Sep-25	Y	
System	BED EOC 2	M25URS9PW1AN	APX 6500 AN	7218637	527CQP1709	Mobile	31-Jul-20	30-Sep-25	Y	
System	BED EOC 1	M25URS9PW1AN	APX 6500 AN	7218638	527CQP1710	Mobile	31-Jul-20	30-Sep-25	Y	
System	BED EOC 4	M25URS9PW1AN	APX 6500 AN	7218639	527CQP1711	Mobile	31-Jul-20	30-Sep-25	Y	
Fire Department	BEDF-M-Barnhart	H98UCF9PW6AN	APX 6000 AN	7208179	481CMX1856	Portable	31-Dec-16	31-Dec-23	Y	
Fire Department	BEDF-J-Mason	H98UCF9PW6AN	APX 6000 AN	7208135	481CMX1857	Portable	31-Dec-16	31-Dec-23	Y	
Fire Department	BEDF-K-Bennett	H98UCF9PW6AN	APX 6000 AN	7208178	481CMX1858	Portable	31-Dec-16	31-Dec-23	Y	
Fire Department	BEDF-A-Smith	H98UCF9PW6AN	APX 6000 AN	7208137	481CMX1859	Portable	31-Dec-16	31-Dec-23	Y	
Fire Department	BEDF-J-Burleson	H98UCF9PW6AN	APX 6000 AN	7208218	481CMX1860	Portable	31-Dec-16	31-Dec-23	Y	
Fire Department	BEDF-J-Brown	H98UCF9PW6AN	APX 6000 AN	7208215	481CMX1861	Portable	31-Dec-16	31-Dec-23	Y	
Fire Department	BEDF-D-STEWART	H98UCF9PW6AN	APX 6000 AN	7208070	481CMX1862	Portable	31-Dec-16	31-Dec-23	Y	
Fire Department	BEDF-R-Butler	H98UCF9PW6AN	APX 6000 AN	7208033	481CMX1863	Portable	31-Dec-16	31-Dec-23	Y	
Fire Department	BEDF-D-RAY	H98UCF9PW6AN	APX 6000 AN	7208120	481CMX1864	Portable	31-Dec-16	31-Dec-23	Y	
Fire Department	BEDF-D-Cook	H98UCF9PW6AN	APX 6000 AN	7208011	481CMX1865	Portable	31-Dec-16	31-Dec-23	Y	
Fire Department	BEDF-T-Copley	H98UCF9PW6AN	APX 6000 AN	7208022	481CMX1866	Portable	31-Dec-16	31-Dec-23	Y	
Fire Department	BEDF-R-Dearing	H98UCF9PW6AN	APX 6000 AN	7208032	481CMX1867	Portable	31-Dec-16	31-Dec-23	Y	
Fire Department	BEDF-K-Ramos	H98UCF9PW6AN	APX 6000 AN	7207978	481CMX1868	Portable	31-Dec-16	31-Dec-23	Y	
Fire Department	BEDF-E-DAVIS	H98UCF9PW6AN	APX 6000 AN	7208023	481CMX1869	Portable	31-Dec-16	31-Dec-23	Y	
Fire Department	BEDF-B-KEEHAN	H98UCF9PW6AN	APX 6000 AN	7208187	481CMX1870	Portable	31-Dec-16	31-Dec-23	Y	
Fire Department	BEDF-T-Egan	H98UCF9PW6AN	APX 6000 AN	7208012	481CMX1871	Portable	31-Dec-16	31-Dec-23	Y	
Fire Department	BEDF-D-Flores	H98UCF9PW6AN	APX 6000 AN	7208143	481CMX1872	Portable	31-Dec-16	31-Dec-23	Y	
Fire Department	BEDF-J-Gardner	H98UCF9PW6AN	APX 6000 AN	7208188	481CMX1873	Portable	31-Dec-16	31-Dec-23	Y	
Fire Department	BEDF-R-Greenwade	H98UCF9PW6AN	APX 6000 AN	7207982	481CMX1874	Portable	31-Dec-16	31-Dec-23	Y	
Fire Department	BEDF-R-Collins	H98UCF9PW6AN	APX 6000 AN	7207975	481CMX1875	Portable	31-Dec-16	31-Dec-23	Y	
Fire Department	BEDF-R-Hancock	H98UCF9PW6AN	APX 6000 AN	7208026	481CMX1876	Portable	31-Dec-16	31-Dec-23	Y	
Fire Department	BEDF-D-Richardsn	H98UCF9PW6AN	APX 6000 AN	7208119	481CMX1877	Portable	31-Dec-16	31-Dec-23	Y	
Fire Department	BEDF-173-Harngtn	H98UCF9PW6AN	APX 6000 AN	7208069	481CMX1878	Portable	31-Dec-16	31-Dec-23	Y	
Fire Department	BEDF-93-Haringtn	H98UCF9PW6AN	APX 6000 AN	7208177	481CMX1879	Portable	31-Dec-16	31-Dec-23	Y	

AGENDA

Fire Department	BEDF-J-Henrichsn	H98UCF9PW6AN	APX 6000 AN	7208174	481CMX1881	Portable	31-Dec-16	31-Dec-23	Y	
Fire Department	BEDF-L-James	H98UCF9PW6AN	APX 6000 AN	7208025	481CMX1882	Portable	31-Dec-16	31-Dec-23	Y	
Fire Department	BEDF-G-King	H98UCF9PW6AN	APX 6000 AN	7208172	481CMX1883	Portable	31-Dec-16	31-Dec-23	Y	
Fire Department	BEDF-J-Keefer	H98UCF9PW6AN	APX 6000 AN	7208139	481CMX1884	Portable	31-Dec-16	31-Dec-23	Y	
Fire Department	BEDF-J-Kiss	H98UCF9PW6AN	APX 6000 AN	7208124	481CMX1885	Portable	31-Dec-16	31-Dec-23	Y	
Fire Department	BEDF-J-LANKFORD	H98UCF9PW6AN	APX 6000 AN	7207965	481CMX1886	Portable	31-Dec-16	31-Dec-23	Y	
Fire Department	BEDF-R-Laurin	H98UCF9PW6AN	APX 6000 AN	7208176	481CMX1887	Portable	31-Dec-16	31-Dec-23	Y	
Fire Department	BEDF-Z-MEAGER	H98UCF9PW6AN	APX 6000 AN	7207995	481CMX1888	Portable	31-Dec-16	31-Dec-23	Y	
Fire Department	BEDF-K-Pharr	H98UCF9PW6AN	APX 6000 AN	7208028	481CMX1889	Portable	31-Dec-16	31-Dec-23	Y	
Fire Department	BEDF-B-Martin	H98UCF9PW6AN	APX 6000 AN	7208024	481CMX1890	Portable	31-Dec-16	31-Dec-23	Y	
Fire Department	BEDF-C CONNER	H98UCF9PW6AN	APX 6000 AN	7208121	481CMX1891	Portable	31-Dec-16	31-Dec-23	Y	
Fire Department	BEDF-R-Shannon	H98UCF9PW6AN	APX 6000 AN	7208141	481CMX1892	Portable	31-Dec-16	31-Dec-23	Y	
Fire Department	BEDF-G-Qualls	H98UCF9PW6AN	APX 6000 AN	7208208	481CMX1893	Portable	31-Dec-16	31-Dec-23	Y	
Fire Department	BEDF-N-Fansler	H98UCF9PW6AN	APX 6000 AN	7207980	481CMX1894	Portable	31-Dec-16	31-Dec-23	Y	
Fire Department	BEDF-J-Richardsn	H98UCF9PW6AN	APX 6000 AN	7208256	481CMX1895	Portable	31-Dec-16	31-Dec-23	Y	
Fire Department	BEDF-A-LINEHAN	H98UCF9PW6AN	APX 6000 AN	7208071	481CMX1896	Portable	31-Dec-16	31-Dec-23	Y	
Fire Department	BEDF-T-SNYDER	H98UCF9PW6AN	APX 6000 AN	7208006	481CMX1897	Portable	31-Dec-16	31-Dec-23	Y	
Fire Department	BEDF-R-PEEK	H98UCF9PW6AN	APX 6000 AN	7208117	481CMX1898	Portable	31-Dec-16	31-Dec-23	Y	
Fire Department	BEDF-R-STOVALL	H98UCF9PW6AN	APX 6000 AN	7207979	481CMX1899	Portable	31-Dec-16	31-Dec-23	Y	
Fire Department	BEDF-C-LONG	H98UCF9PW6AN	APX 6000 AN	7207977	481CMX1900	Portable	31-Dec-16	31-Dec-23	Y	
Fire Department	BEDF-L-Shiflet	H98UCF9PW6AN	APX 6000 AN	7208138	481CMX1901	Portable	31-Dec-16	31-Dec-23	Y	
Fire Department	BEDF-G-Smithwick	H98UCF9PW6AN	APX 6000 AN	7208182	481CMX1902	Portable	31-Dec-16	31-Dec-23	Y	
Fire Department	BEDF-K-Gutierrez	H98UCF9PW6AN	APX 6000 AN	7208123	481CMX1903	Portable	31-Dec-16	31-Dec-23	Y	
Fire Department	BEDF-J-Starkey	H98UCF9PW6AN	APX 6000 AN	7207981	481CMX1904	Portable	31-Dec-16	31-Dec-23	Y	
Fire Department	BEDF-J-Terbush	H98UCF9PW6AN	APX 6000 AN	7208142	481CMX1905	Portable	31-Dec-16	31-Dec-23	Y	
Fire Department	BEDF-J-Washingto	H98UCF9PW6AN	APX 6000 AN	7208118	481CMX1906	Portable	31-Dec-16	31-Dec-23	Y	
Fire Department	BEDF-J-Tamayo	H98UCF9PW6AN	APX 6000 AN	7208217	481CMX1907	Portable	31-Dec-16	31-Dec-23	Y	
Fire Department	BEDF-S-Fay	H98UCF9PW6AN	APX 6000 AN	7207966	481CMX1908	Portable	31-Dec-16	31-Dec-23	Y	
Fire Department	BEDF-C-Tittle	H98UCF9PW6AN	APX 6000 AN	7208140	481CMX1909	Portable	31-Dec-16	31-Dec-23	Y	
Fire Department	BEDF-J-Moorman	H98UCF9PW6AN	APX 6000 AN	7208095	481CMX1910	Portable	31-Dec-16	31-Dec-23	Y	
Fire Department	BEDF-E-Higgins	H98UCF9PW6AN	APX 6000 AN	7208122	481CMX1911	Portable	31-Dec-16	31-Dec-23	Y	
Fire Department	BEDF-L-WARREN	H98UCF9PW6AN	APX 6000 AN	7208091	481CMX1912	Portable	31-Dec-16	31-Dec-23	Y	
Fire Department	BEDF-J-Watson	H98UCF9PW6AN	APX 6000 AN	7208136	481CMX1913	Portable	31-Dec-16	31-Dec-23	Y	
Fire Department	BEDF-B-McAfee	H98UCF9PW6AN	APX 6000 AN	7208081	481CMX1914	Portable	31-Dec-16	31-Dec-23	Y	
Fire Department	BEDF-J-Whitehead	H98UCF9PW6AN	APX 6000 AN	7208116	481CMX1915	Portable	31-Dec-16	31-Dec-23	Y	
Fire Department	BEDF-M-Whiteside	H98UCF9PW6AN	APX 6000 AN	7208013	481CMX1916	Portable	31-Dec-16	31-Dec-23	Y	
Fire Department	BEDF-M-Williams	H98UCF9PW6AN	APX 6000 AN	7208184	481CMX1917	Portable	31-Dec-16	31-Dec-23	Y	
Fire Department	BEDF-ADMIN-EMER1	H98UCF9PW6AN	APX 6000 AN	7208206	481CMX1918	Portable	31-Dec-16	31-Dec-23	Y	
Fire Department	BEDF-ADMIN-EMER2	H98UCF9PW6AN	APX 6000 AN	7208207	481CMX1919	Portable	31-Dec-16	31-Dec-23	Y	
Fire Department	BEDF-Inv-Spare	H98UCF9PW6AN	APX 6000 AN	7207968	481CMX1920	Portable	31-Dec-16	31-Dec-23	Y	
Fire Department	BEDF-FIRE-Spare1	H98UCF9PW6AN	APX 6000 AN	7208155	481CMX1921	Portable	31-Dec-16	31-Dec-23	Y	
Fire Department	BEDF-FIRE-Spare2	H98UCF9PW6AN	APX 6000 AN	7208156	481CMX1922	Portable	31-Dec-16	31-Dec-23	Y	
Fire Department	BEDF-FIRE-Spare3	H98UCF9PW6AN	APX 6000 AN	7208157	481CMX1923	Portable	31-Dec-16	31-Dec-23	Y	
Fire Department	BEDF-FIRE-Spare4	H98UCF9PW6AN	APX 6000 AN	7208158	481CMX1924	Portable	31-Dec-16	31-Dec-23	Y	
Fire Department	BEDF-FIRE-Spare5	H98UCF9PW6AN	APX 6000 AN	7208159	481CMX1925	Portable	31-Dec-16	31-Dec-23	Y	
Fire Department	BEDF-FIRE-Spare6	H98UCF9PW6AN	APX 6000 AN	7208160	481CMX1926	Portable	31-Dec-16	31-Dec-23	Y	
Fire Department	BEDF-T-Ovrstreet	H98UCF9PW6AN	APX 6000 AN	7208066	481CMX1927	Portable	31-Dec-16	31-Dec-23	Y	
Fire Department	BEDF-J-Whiteside	H98UCF9PW6AN	APX 6000 AN	7208014	481CMX1928	Portable	31-Dec-16	31-Dec-23	Y	
Fire Department	BEDF-SAFTY-OFCR	H98UCF9PW6AN	APX 6000 AN	7208130	481CPK2853	Portable	31-Dec-16	31-Dec-23	Y	
Fire Department	BEDF-C152A	H98UCF9PW6AN	APX 6000 AN	7208125	481CPK2855	Portable	31-Dec-16	31-Dec-23	Y	
Fire Department	BEDF-C-BERRIER	H98UCF9PW6AN	APX 6000 AN	7208128	481CPK2856	Portable	31-Dec-16	31-Dec-23	Y	
Fire Department	BEDF-C-Zaragoza	H98UCF9PW6AN	APX 6000 AN	7208626	481CPK2857	Portable	31-Dec-16	31-Dec-23	Y	
Fire Department	BEDF-J-FLORES	H98UCF9PW6AN	APX 6000 AN	7208131	481CPK2864	Portable	31-Dec-16	31-Dec-23	Y	
Fire Department	BEDF-RIT-OFCR	H98UCF9PW6AN	APX 6000 AN	7208129	481CPK2865	Portable	31-Dec-16	31-Dec-23	Y	
Fire Department	BEDF-B-Saladino	H18UCF9PW6AN	XTS 5000	7208165	721CFG0203	Portable	30-Nov-13	31-Dec-18	Y	Unable to look up Serial Number
Fire Department	BEDF-Bat-Chief	H18UCF9PW6AN	XTS 5000	7208029	721CFG0205	Portable	30-Nov-13	31-Dec-18	Y	Unable to look up Serial Number
Fire Department	BEDF-C150A	H18UCF9PW6AN	XTS 5000	7207967	721CFT8827	Portable	30-Nov-13	31-Dec-18	Y	
Fire Department	BEDF-Cache2	H18UCF9PW6AN	XTS 5000	7208166	721CFT8832	Portable	30-Nov-13	31-Dec-18	Y	
Fire Department	BEDF-Cache8	H18UCF9PW6AN	XTS 5000	7208251	721CGK2754	Portable	30-Nov-13	31-Dec-18	Y	
Fire Department	BEDF-CFA REHAB	H18UCF9PW6AN	XTS 5000	7208170	721CGM3032	Portable	30-Nov-13	31-Dec-18	Y	
Fire Department	BEDF-Cache9	H18UCF9PW6AN	XTS 5000	7208252	721CGM3033	Portable	30-Nov-13	31-Dec-18	Y	
Fire Department	BEDF-STA-3-LT	H18UCF9PW6AN	XTS 5000	7208001	721CGM7041	Portable	30-Nov-13	31-Dec-18	Y	
Fire Department	BEDF-Cache1	H18UCF9PW6AN	XTS 5000	7208164	721CGM7042	Portable	30-Nov-13	31-Dec-18	Y	
Fire Department	BEDF-C153A	H18UCF9PW6AN	XTS 5000	7207963	721CGM7046	Portable	30-Nov-13	31-Dec-18	Y	
Fire Department	BEDF-Cache7	H18UCF9PW6AN	XTS 5000	7208250	721CGT1454	Portable	30-Nov-13	31-Dec-18	Y	
Fire Department	BEDF-Cache5	H18UCF9PW6AN	XTS 5000	7208169	721CGT8824	Portable	30-Nov-13	31-Dec-18	Y	
Fire Department	BEDF-Cache11	H18UCF9PW6AN	XTS 5000	7208254	721CGT8825	Portable	30-Nov-13	31-Dec-18	Y	
Fire Department	BEDF-Cache10	H18UCF9PW6AN	XTS 5000	7208253	721CHD0113	Portable	30-Nov-13	31-Dec-18	Y	
Fire Department	BEDF-Cache4	H18UCF9PW6AN	XTS 5000	7208168	721CHP1227	Portable	30-Nov-13	31-Dec-18	Y	
Fire Department	BEDF-Cache3	H18UCF9PW6AN	XTS 5000	7208167	721CHP1229	Portable	30-Nov-13	31-Dec-18	Y	
Fire Department	BEDF-C151A	H18UCF9PW6AN	XTS 5000	7208209	721CPT0714	Portable	30-Nov-13	31-Dec-18	Y	
Fire Department	BEDF-SW15A	H97TGD9PW1AN	APX 7000 XE	7218640	526CQP0721	Portable	18-May-18	30-Jun-23	Y	Unable to look up Serial Number, Guess on model
Fire Department	BEDF-SW15B	H97TGD9PW1AN	APX 7000 XE	7218641	526CQP0722	Portable	18-May-18	30-Jun-23	Y	Unable to look up Serial Number, Guess on model
Fire Department	STATION 2 ?	H46UCF9PW6BN	XTS 2500	7208072	205CKF1193	Portable	31-Oct-14	31-Dec-19	Y	
MCP	BEDF-MCP6	M30TSS9PW1AN	APX 7500	7208088	656CNM3200	Mobile	1-Jun-17	30-Sep-22	Y	
MCP	BEDF-MCP3	M30TSS9PW1AN	APX 7500	7208085	656CNM3201	Mobile	1-Jun-17	30-Sep-22	Y	
MCP	BEDF-MCP7	M30TSS9PW1AN	APX 7500	7208089	656CNM3202	Mobile	1-Jun-17	30-Sep-22	Y	
MCP	BEDF-MCP2	M30TSS9PW1AN	APX 7500	7207976	656CNM3203	Mobile	1-Jun-17	30-Sep-22	Y	
MCP	BEDF-MCP8	M30TSS9PW1AN	APX 7500	7208090	656CNM3204	Mobile	1-Jun-17	30-Sep-22	Y	

AGENDA

MCP	BEDF-MCP5	M30TSS9PW1AN	APX 7500	7208087	656CNM5214	Mobile	1-Jun-17	30-Se	Y		
MCP	BEDF-MCP1	M30TSS9PW1AN	APX 7500	7207969	656CNM5215	Mobile	1-Jun-17	30-Se			
MCP	BEDF-MCP-ACU7	M30TSS9PW1AN	XTL 5000	7208102	500CFG0050	Mobile	30-Nov-13	31-De			7/6 - No need to replace
MCP	BEDF-MCP-ACU6	M20URS9PW1AN	XTL 5000	7208101	500CHT1780	Mobile	30-Nov-13	31-Dec-18	Y	7/800 - ACU	7/6 - No need to replace
MCP	BEDF-MCP-ACU5	M20URS9PW1AN	XTL 5000	7208100	500CHT1797	Mobile	30-Nov-13	31-Dec-18	Y	7/800 - ACU	7/6 - No need to replace
MCP	BEDCMD-Go-Radio	M25URS9PW1AN	APX 6500 AN	7208247	527CNM2215	Mobile	31-Dec-16	31-Dec-23	Y	7/800 - ACU	
MCP			APX 6500 AN			Mobile			Y	VHF - Dispatch Area	
MCP			APX 6500 AN			Mobile			Y	VHF - ACU	
MCP			APX 6500 AN			Mobile			Y	VHF - ACU	
MCP			APX 6500 AN			Mobile			Y	VHF - Parker Trunked - ACU	
MCP			APX 6500 AN			Mobile			Y	UHF - Dispatch Area	
MCP			APX 6500 AN			Mobile			Y	UHF -ACU	
Fire Department	BEDF-SPARE2	M20URS9PW1AN	XTL 5000	7208044	500CHT1770	Mobile	30-Nov-13	31-Dec-18	Y		
Fire Department	BEDF-MAR151	M20URS9PW1AN	XTL 5000	7208103	500CHT1778	Mobile	30-Nov-13	31-Dec-18	Y		
Fire Department	BEDF-715-Rear	M20URS9PW1AN	XTL 5000	7208056	500CHT1790	Mobile	30-Nov-13	31-Dec-18	Y		
Fire Department	BEDF-UTL-15	M20URS9PW1AN	XTL 5000	7208055	500CHT1793	Mobile	30-Nov-13	31-Dec-18	Y		
Fire Department	BEDF-C154	M20URS9PW1AN	XTL 5000	7207974	500CHT1795	Mobile	30-Nov-13	31-Dec-18	Y		
Fire Department	BEDF-C150	M20URS9PW1AN	XTL 5000	7207972	500CHT1796	Mobile	30-Nov-13	31-Dec-18	Y		
Fire Department	BEDF-C151	M20URS9PW1AN	XTL 5000	7208074	500CHT1801	Mobile	30-Nov-13	31-Dec-18	Y		
Fire Department	BEDF-MAR152	M20URS9PW1AN	XTL 5000	7208062	500CHT1806	Mobile	30-Nov-13	31-Dec-18	Y		
Fire Department	BEDF-M151	M25URS9PW1AN	APX 6500 AN	7218660	527CPV0081	Mobile	31-Dec-16	31-Dec-23	Y		
Fire Department	BEDF-T154X	M25URS9PW1AN	APX 6500 AN	7208261	527CPZ0091	Mobile	31-Dec-16	31-Dec-23	Y		
Fire Department	BEDF-M155	M25URS9PW1AN	APX 6500 AN	7208020	527CQV2574	Mobile	31-Dec-16	31-Dec-23	Y		
Fire Department	BEDF-M154	M25URS9PW1AN	APX 6500 AN	7208021	527CQV2575	Mobile	31-Dec-16	31-Dec-23	Y		
Fire Department	BEDF-E153	M25URS9PW1AN	APX 6500 AN	7208059	527CQV2576	Mobile	31-Dec-16	31-Dec-23	Y		
Fire Department	BEDF-RES15	M25URS9PW1AN	APX 6500 AN	7208083	527CQV2577	Mobile	31-Dec-16	31-Dec-23	Y		
Fire Department	BEDF-C152	M25URS9PW1AN	APX 6500 AN	7218649	527CQV2578	Mobile	31-Dec-16	31-Dec-23	Y		
Fire Department	BEDF-T151	M25URS9PW1AN	APX 6500 AN	7208034	527CSB1813	Mobile	31-Dec-16	31-Dec-23	Y		
Fire Department	BEDF-E155	M25URS9PW1AN	APX 6500 AN	7208065	527CSB1814	Mobile	31-Dec-16	31-Dec-23	Y		
Fire Department	BEDF-E154	M25URS9PW1AN	APX 6500 AN	7208054	527CSB1815	Mobile	31-Dec-16	31-Dec-23	Y		
Fire Department	BEDF-M156	M25URS9PW1AN	APX 6500 AN	7208064	527CSB1816	Mobile	31-Dec-16	31-Dec-23	Y		
Fire Department	BEDF-M153	M25URS9PW1AN	APX 6500 AN	7208019	527CSB1817	Mobile	31-Dec-16	31-Dec-23	Y		
Fire Department	BEDF-E152	M25URS9PW1AN	APX 6500 AN	7208015	527CSB1818	Mobile	31-Dec-16	31-Dec-23	Y		
Fire Department	BEDF-A151	M25URS9PW1AN	APX 6500 AN	7208080	527CSB1819	Mobile	31-Dec-16	31-Dec-23	Y		
Fire Department	BEDF-BAT15-Rear	M25URS9PW1AN	APX 6500 AN	7208093	527CSB1820	Mobile	31-Dec-16	31-Dec-23	Y		
Fire Department	BEDF-BAT15-Front	M25URS9PW1AN	APX 6500 AN	7208094	527CSB1822	Mobile	31-Dec-16	31-Dec-23	Y		
Fire Department	BEDF-M152	M25URS9PW1AN	APX 6500 AN	7218655	527CTF0873	Mobile	31-Dec-16	31-Dec-23	Y		
Fire Department	BEDF-C153	M25URS9PW1AN	APX 6500 AN	7207973	527CUH2744	Mobile	31-Dec-16	31-Dec-23	Y		
Fire Department	BEDF-SPARE1	M20URS9PW1AN	XTL 5000	7208049	500CEL1861	Mobile	30-Nov-13	31-Dec-18	Y	Unable to look up Serial Number, Guess on model	
Police Department	BEDP-J-Richer	H98UCF9PW6AN	APX 6000 AN	7208231	481CMX1929	Portable	31-Dec-16	31-Dec-23	Y		
Police Department	BEDP-M-Aguirre	H98UCF9PW6AN	APX 6000 AN	7208096	481CMX1930	Portable	31-Dec-16	31-Dec-23	Y		
Police Department	BEDP-D-Carlise	H98UCF9PW6AN	APX 6000 AN	7208150	481CMX1931	Portable	31-Dec-16	31-Dec-23	Y		
Police Department	BEDP-C-ALCALA	H98UCF9PW6AN	APX 6000 AN	7208625	481CMX1932	Portable	31-Dec-16	31-Dec-23	Y		
Police Department	BEDP-J-BROWN	H98UCF9PW6AN	APX 6000 AN	7208067	481CMX1933	Portable	31-Dec-16	31-Dec-23	Y		
Police Department	BEDP-C-Baxley	H98UCF9PW6AN	APX 6000 AN	7208195	481CMX1934	Portable	31-Dec-16	31-Dec-23	Y		
Police Department	BEDP-B-Grice	H98UCF9PW6AN	APX 6000 AN	7208205	481CMX1936	Portable	31-Dec-16	31-Dec-23	Y		
Police Department	BEDP-S-Cepak	H98UCF9PW6AN	APX 6000 AN	7208227	481CMX1937	Portable	31-Dec-16	31-Dec-23	Y		
Police Department	BEDP-L-Stutevile	H98UCF9PW6AN	APX 6000 AN	7208132	481CMX1938	Portable	31-Dec-16	31-Dec-23	Y		
Police Department	BEDP-J-Lopez	H98UCF9PW6AN	APX 6000 AN	7208007	481CMX1939	Portable	31-Dec-16	31-Dec-23	Y		
Police Department	BEDP-B-Bowen	H98UCF9PW6AN	APX 6000 AN	7208005	481CMX1940	Portable	31-Dec-16	31-Dec-23	Y		
Police Department	BEDP-J Dorman	H98UCF9PW6AN	APX 6000 AN	7208052	481CMX1941	Portable	31-Dec-16	31-Dec-23	Y		
Police Department	BEDP-D-Bridger	H98UCF9PW6AN	APX 6000 AN	7207987	481CMX1942	Portable	31-Dec-16	31-Dec-23	Y		
Police Department	BEDP-T-Brown	H98UCF9PW6AN	APX 6000 AN	7208161	481CMX1943	Portable	31-Dec-16	31-Dec-23	Y		
Police Department	BEDP-J-Buford	H98UCF9PW6AN	APX 6000 AN	7208163	481CMX1944	Portable	31-Dec-16	31-Dec-23	Y		
Police Department	BEDP-T-Christy	H98UCF9PW6AN	APX 6000 AN	7207986	481CMX1945	Portable	31-Dec-16	31-Dec-23	Y		
Police Department	BEDP-K-Cole	H98UCF9PW6AN	APX 6000 AN	7208219	481CMX1946	Portable	31-Dec-16	31-Dec-23	Y		
Police Department	BEDP-M-Collins	H98UCF9PW6AN	APX 6000 AN	7208233	481CMX1947	Portable	31-Dec-16	31-Dec-23	Y		
Police Department	BEDP-L-Cook	H98UCF9PW6AN	APX 6000 AN	7208241	481CMX1948	Portable	31-Dec-16	31-Dec-23	Y		
Police Department	BEDP-C-Cottongam	H98UCF9PW6AN	APX 6000 AN	7208145	481CMX1949	Portable	31-Dec-16	31-Dec-23	Y		
Police Department	BEDP-D-Crowell	H98UCF9PW6AN	APX 6000 AN	7208201	481CMX1950	Portable	31-Dec-16	31-Dec-23	Y		
Police Department	BEDP-A-Crump	H98UCF9PW6AN	APX 6000 AN	7208202	481CMX1951	Portable	31-Dec-16	31-Dec-23	Y		
Police Department	BEDP-T-Davis	H98UCF9PW6AN	APX 6000 AN	7207985	481CMX1952	Portable	31-Dec-16	31-Dec-23	Y		
Police Department	BEDP-B-Deutsch	H98UCF9PW6AN	APX 6000 AN	7208190	481CMX1953	Portable	31-Dec-16	31-Dec-23	Y		
Police Department	BEDP-L-Eberling	H98UCF9PW6AN	APX 6000 AN	7208185	481CMX1954	Portable	31-Dec-16	31-Dec-23	Y		
Police Department	BEDP-W-Eurto	H98UCF9PW6AN	APX 6000 AN	7207983	481CMX1955	Portable	31-Dec-16	31-Dec-23	Y		
Police Department	BEDP-D Wood	H98UCF9PW6AN	APX 6000 AN	7208192	481CMX1956	Portable	31-Dec-16	31-Dec-23	Y		
Police Department	BEDP-J-Gauger	H98UCF9PW6AN	APX 6000 AN	7208216	481CMX1957	Portable	31-Dec-16	31-Dec-23	Y		
Police Department	BEDP-J-Gibson	H98UCF9PW6AN	APX 6000 AN	7208237	481CMX1958	Portable	31-Dec-16	31-Dec-23	Y		
Police Department	BEDP-O-Garcia	H98UCF9PW6AN	APX 6000 AN	7208147	481CMX1959	Portable	31-Dec-16	31-Dec-23	Y		
Police Department	BEDP-C-Gregory	H98UCF9PW6AN	APX 6000 AN	7208196	481CMX1960	Portable	31-Dec-16	31-Dec-23	Y		
Police Department	BEDP-E-Griffin	H98UCF9PW6AN	APX 6000 AN	7207999	481CMX1961	Portable	31-Dec-16	31-Dec-23	Y		
Police Department	BEDP-M-Hager	H98UCF9PW6AN	APX 6000 AN	7208002	481CMX1962	Portable	31-Dec-16	31-Dec-23	Y		
Police Department	BEDP-M-Hall	H98UCF9PW6AN	APX 6000 AN	7208223	481CMX1963	Portable	31-Dec-16	31-Dec-23	Y		
Police Department	BEDP-L-Hawkins	H98UCF9PW6AN	APX 6000 AN	7208242	481CMX1964	Portable	31-Dec-16	31-Dec-23	Y		
Police Department	BEDP-JAIL-Super	H98UCF9PW6AN	APX 6000 AN	7208211	481CMX1965	Portable	31-Dec-16	31-Dec-23	Y		
Police Department	BEDP-Z-Hicks	H98UCF9PW6AN	APX 6000 AN	7207992	481CMX1966	Portable	31-Dec-16	31-Dec-23	Y		
Police Department	BEDP-G-Hlavinka	H98UCF9PW6AN	APX 6000 AN	7208162	481CMX1967	Portable	31-Dec-16	31-Dec-23	Y		
Police Department	BEDP-K Blundell	H98UCF9PW6AN	APX 6000 AN	7208236	481CMX1968	Portable	31-Dec-16	31-Dec-23	Y		
Police Department	BEDP-R-Huitt	H98UCF9PW6AN	APX 6000 AN	7207990	481CMX1969	Portable	31-Dec-16	31-Dec-23	Y		

AGENDA

Police Department	BEDP-V-Morales	H98UCF9PW6AN	APX 6000 AN	7208213	481CMX1971	Portable	31-Dec-16	31-Dec-23	Y
Police Department	BEDP-B-LaPenna	H98UCF9PW6AN	APX 6000 AN	7207993	481CMX1972	Portable	31-Dec-16	31-Dec-23	Y
Police Department	BEDP-L-Lobdell	H98UCF9PW6AN	APX 6000 AN	7208204	481CMX1973	Portable	31-Dec-16	31-Dec-23	Y
Police Department	BEDP-R-Flores	H98UCF9PW6AN	APX 6000 AN	7208186	481CMX1974	Portable	31-Dec-16	31-Dec-23	Y
Police Department	BEDP-J-Hamilton	H98UCF9PW6AN	APX 6000 AN	7207991	481CMX1975	Portable	31-Dec-16	31-Dec-23	Y
Police Department	BEDP-B-Mack	H98UCF9PW6AN	APX 6000 AN	7208181	481CMX1976	Portable	31-Dec-16	31-Dec-23	Y
Police Department	BEDP-M-McClain	H98UCF9PW6AN	APX 6000 AN	7208197	481CMX1977	Portable	31-Dec-16	31-Dec-23	Y
Police Department	BEDP-A-Hocker	H98UCF9PW6AN	APX 6000 AN	7207989	481CMX1978	Portable	31-Dec-16	31-Dec-23	Y
Police Department	BEDP-B-Meaders	H98UCF9PW6AN	APX 6000 AN	7208194	481CMX1979	Portable	31-Dec-16	31-Dec-23	Y
Police Department	BEDP-C-Miller	H98UCF9PW6AN	APX 6000 AN	7208027	481CMX1980	Portable	31-Dec-16	31-Dec-23	Y
Police Department	BEDP-M-Miller	H98UCF9PW6AN	APX 6000 AN	7208004	481CMX1981	Portable	31-Dec-16	31-Dec-23	Y
Police Department	BEDP-W-Moody	H98UCF9PW6AN	APX 6000 AN	7208175	481CMX1982	Portable	31-Dec-16	31-Dec-23	Y
Police Department	BEDP-M-Bellingha	H98UCF9PW6AN	APX 6000 AN	7208221	481CMX1983	Portable	31-Dec-16	31-Dec-23	Y
Police Department	BEDP-N-Noble	H98UCF9PW6AN	APX 6000 AN	7208255	481CMX1984	Portable	31-Dec-16	31-Dec-23	Y
Police Department	BEDP-T-Noble	H98UCF9PW6AN	APX 6000 AN	7208191	481CMX1985	Portable	31-Dec-16	31-Dec-23	Y
Police Department	BEDP-O-Nunez	H98UCF9PW6AN	APX 6000 AN	7208144	481CMX1986	Portable	31-Dec-16	31-Dec-23	Y
Police Department	BEDP-G-Panelli	H98UCF9PW6AN	APX 6000 AN	7208171	481CMX1987	Portable	31-Dec-16	31-Dec-23	Y
Police Department	BEDP-S-Jakubik	H98UCF9PW6AN	APX 6000 AN	7208235	481CMX1988	Portable	31-Dec-16	31-Dec-23	Y
Police Department	BEDP-E-Mack	H98UCF9PW6AN	APX 6000 AN	7208003	481CMX1989	Portable	31-Dec-16	31-Dec-23	Y
Police Department	BEDP-C-Sandoval	H98UCF9PW6AN	APX 6000 AN	7208010	481CMX1990	Portable	31-Dec-16	31-Dec-23	Y
Police Department	BEDP-C-Hill	H98UCF9PW6AN	APX 6000 AN	7208199	481CMX1991	Portable	31-Dec-16	31-Dec-23	Y
Police Department	BEDP-L-McDonough	H98UCF9PW6AN	APX 6000 AN	7208126	481CMX1992	Portable	31-Dec-16	31-Dec-23	Y
Police Department	BEDP-J-Pruett	H98UCF9PW6AN	APX 6000 AN	7208154	481CMX1993	Portable	31-Dec-16	31-Dec-23	Y
Police Department	BEDP-C-George	H98UCF9PW6AN	APX 6000 AN	7208222	481CMX1994	Portable	31-Dec-16	31-Dec-23	Y
Police Department	BEDP-H-Hart	H98UCF9PW6AN	APX 6000 AN	7208238	481CMX1995	Portable	31-Dec-16	31-Dec-23	Y
Police Department	BEDP-P-RIPLEY	H98UCF9PW6AN	APX 6000 AN	7208629	481CMX1996	Portable	31-Dec-16	31-Dec-23	Y
Police Department	BEDP-K-Roberts	H98UCF9PW6AN	APX 6000 AN	7207962	481CMX1997	Portable	31-Dec-16	31-Dec-23	Y
Police Department	BEDP-T-Robertson	H98UCF9PW6AN	APX 6000 AN	7208228	481CMX1998	Portable	31-Dec-16	31-Dec-23	Y
Police Department	BEDP-I-Roman	H98UCF9PW6AN	APX 6000 AN	7208189	481CMX1999	Portable	31-Dec-16	31-Dec-23	Y
Police Department	BEDP-D-Rutledge	H98UCF9PW6AN	APX 6000 AN	7208173	481CMX2000	Portable	31-Dec-16	31-Dec-23	Y
Police Department	BEDP-B-Schuesslr	H98UCF9PW6AN	APX 6000 AN	7208146	481CMX2001	Portable	31-Dec-16	31-Dec-23	Y
Police Department	BEDP-N-Scott	H98UCF9PW6AN	APX 6000 AN	7207961	481CMX2002	Portable	31-Dec-16	31-Dec-23	Y
Police Department	BEDP-P-Roper-Foo	H98UCF9PW6AN	APX 6000 AN	7208214	481CMX2003	Portable	31-Dec-16	31-Dec-23	Y
Police Department	BEDP-S-Selvidge	H98UCF9PW6AN	APX 6000 AN	7208030	481CMX2004	Portable	31-Dec-16	31-Dec-23	Y
Police Department	BEDP-T-Shelley	H98UCF9PW6AN	APX 6000 AN	7208183	481CMX2005	Portable	31-Dec-16	31-Dec-23	Y
Police Department	BEDP-M-Shikany	H98UCF9PW6AN	APX 6000 AN	7207994	481CMX2006	Portable	31-Dec-16	31-Dec-23	Y
Police Department	BEDP-L-Simmons	H98UCF9PW6AN	APX 6000 AN	7207988	481CMX2007	Portable	31-Dec-16	31-Dec-23	Y
Police Department	BEDP-D-Smith	H98UCF9PW6AN	APX 6000 AN	7208036	481CMX2008	Portable	31-Dec-16	31-Dec-23	Y
Police Department	BEDP-M-McCann	H98UCF9PW6AN	APX 6000 AN	7208232	481CMX2009	Portable	31-Dec-16	31-Dec-23	Y
Police Department	BEDP-T-Smith	H98UCF9PW6AN	APX 6000 AN	7208180	481CMX2010	Portable	31-Dec-16	31-Dec-23	Y
Police Department	BEDP-D-Spears	H98UCF9PW6AN	APX 6000 AN	7208068	481CMX2011	Portable	31-Dec-16	31-Dec-23	Y
Police Department	BEDP-T-Stillman	H98UCF9PW6AN	APX 6000 AN	7208008	481CMX2012	Portable	31-Dec-16	31-Dec-23	Y
Police Department	BEDP-T-Thornton	H98UCF9PW6AN	APX 6000 AN	7208037	481CMX2013	Portable	31-Dec-16	31-Dec-23	Y
Police Department	BEDP-M-Tooley	H98UCF9PW6AN	APX 6000 AN	7208200	481CMX2014	Portable	31-Dec-16	31-Dec-23	Y
Police Department	BEDC-J-Hoaglind	H98UCF9PW6AN	APX 6000 AN	7208234	481CMX2015	Portable	31-Dec-16	31-Dec-23	Y
Police Department	BEDP-E Perez	H98UCF9PW6AN	APX 6000 AN	7208134	481CMX2016	Portable	31-Dec-16	31-Dec-23	Y
Police Department	BEDP-S-Jeffrey	H98UCF9PW6AN	APX 6000 AN	7208229	481CMX2017	Portable	31-Dec-16	31-Dec-23	Y
Police Department	BEDP-C-West	H98UCF9PW6AN	APX 6000 AN	7208210	481CMX2018	Portable	31-Dec-16	31-Dec-23	Y
Police Department	BEDP-R-Wilkey	H98UCF9PW6AN	APX 6000 AN	7208193	481CMX2019	Portable	31-Dec-16	31-Dec-23	Y
Police Department	BEDP-S-Williamsn	H98UCF9PW6AN	APX 6000 AN	7208133	481CMX2020	Portable	31-Dec-16	31-Dec-23	Y
Police Department	BEDP-R-Barnes	H98UCF9PW6AN	APX 6000 AN	7208220	481CMX2021	Portable	31-Dec-16	31-Dec-23	Y
Police Department	BEDP-I Henderson	H98UCF9PW6AN	APX 6000 AN	7208203	481CMX2022	Portable	31-Dec-16	31-Dec-23	Y
Police Department	BEDP-JAIL-Bank1	H98UCF9PW6AN	APX 6000 AN	7208212	481CMX2023	Portable	31-Dec-16	31-Dec-23	Y
Police Department	BEDP-JAIL-Bank2	H98UCF9PW6AN	APX 6000 AN	7208240	481CMX2024	Portable	31-Dec-16	31-Dec-23	Y
Police Department	BEDP-JAIL-Bank3	H98UCF9PW6AN	APX 6000 AN	7208239	481CMX2025	Portable	31-Dec-16	31-Dec-23	Y
Police Department	BEDP-BANK9	H98UCF9PW6AN	APX 6000 AN	7208635	481CMX2028	Portable	31-Dec-16	31-Dec-23	Y
Police Department	BEDP-PD-Bank2	H98UCF9PW6AN	APX 6000 AN	7208152	481CMX2029	Portable	31-Dec-16	31-Dec-23	Y
Police Department	BEDP-T Manus	H98UCF9PW6AN	APX 6000 AN	7207998	481CMX2030	Portable	31-Dec-16	31-Dec-23	Y
Police Department	BEDP-PD-Bank4	H98UCF9PW6AN	APX 6000 AN	7208153	481CMX2031	Portable	31-Dec-16	31-Dec-23	Y
Police Department	BEDP-PD-Bank5	H98UCF9PW6AN	APX 6000 AN	7208230	481CMX2032	Portable	31-Dec-16	31-Dec-23	Y
Police Department	BEDP-B-Thomas	H98UCF9PW6AN	APX 6000 AN	7208000	481CMX2033	Portable	31-Dec-16	31-Dec-23	Y
Police Department	BEDP- N-Wilks	H98UCF9PW6AN	APX 6000 AN	7208198	481CMX2034	Portable	31-Dec-16	31-Dec-23	Y
Police Department	BEDP-C Wilkinson	H98UCF9PW6AN	APX 6000 AN	7208009	481CMX2035	Portable	31-Dec-16	31-Dec-23	Y
Police Department	BEDP-VIPS1	H98UCF9PW6AN	APX 6000 AN	7208224	481CNM1877	Portable	31-Dec-16	31-Dec-23	Y
Police Department	BEDP-VIPS2	H98UCF9PW6AN	APX 6000 AN	7208226	481CNM1878	Portable	31-Dec-16	31-Dec-23	Y
Police Department	BEDP-VIPS3	H98UCF9PW6AN	APX 6000 AN	7208225	481CNM1879	Portable	31-Dec-16	31-Dec-23	Y
Police Department	BEDP-POLICE	H98UCF9PW6AN	APX 6000 AN	7208149	481CNM1880	Portable	31-Dec-16	31-Dec-23	Y
Police Department	BEDP-K-BENNETT	H98UCF9PW6AN	APX 6000 AN	7218657	481CNM1881	Portable	31-Dec-16	31-Dec-23	Y
Police Department	BEDP-S-Bean	H98UCF9PW6AN	APX 6000 AN	7207964	481CPF9703	Portable	31-Dec-16	31-Dec-23	Y
Police Department	BEDP-TC-Bank1	H98UCF9PW6AN	APX 6000 AN	7208106	481CPK2849	Portable	31-Dec-16	31-Dec-23	Y
Police Department	BEDP-C-Thomas	H98UCF9PW6AN	APX 6000 AN	7208111	481CPK2850	Portable	31-Dec-16	31-Dec-23	Y
Police Department	BEDP-TC-Bank7	H98UCF9PW6AN	APX 6000 AN	7208112	481CPK2852	Portable	31-Dec-16	31-Dec-23	Y
Police Department	BEDP-TC-Bank4	H98UCF9PW6AN	APX 6000 AN	7208109	481CPK2854	Portable	31-Dec-16	31-Dec-23	Y
Police Department	BEDP-TC-Bank3	H98UCF9PW6AN	APX 6000 AN	7208108	481CPK2858	Portable	31-Dec-16	31-Dec-23	Y
Police Department	BEDP-TC-Bank5	H98UCF9PW6AN	APX 6000 AN	7208110	481CPK2859	Portable	31-Dec-16	31-Dec-23	Y
Police Department	BEDP-TC-Bank2	H98UCF9PW6AN	APX 6000 AN	7208107	481CPK2860	Portable	31-Dec-16	31-Dec-23	Y
Police Department	BEDP-TC-Bank8	H98UCF9PW6AN	APX 6000 AN	7208113	481CPK2861	Portable	31-Dec-16	31-Dec-23	Y
Police Department	BEDP-TC-Bank10	H98UCF9PW6AN	APX 6000 AN	7208115	481CPK2862	Portable	31-Dec-16	31-Dec-23	Y
Police Department	BEDP-TC-Bank9	H98UCF9PW6AN	APX 6000 AN	7208114	481CPK2863	Portable	31-Dec-16	31-Dec-23	Y

AGENDA

Police Department	BEDP-HEBSmith	H97TGD9PW1AN	APX 7000	7218642	526CQP0728	Portable	18-May-18	30-Ju	Y	Unable to look up Serial Number, Guess on Model
Police Department	BEDP-HEBEberling	H97TGD9PW1AN	APX 7000	7218643	655CQP3729	Portable	18-May-18	30-Ju		
Police Department	BEDP-HEBISD-385	H18UCF9PW6AN	XTS 5000	7218636	721CHP1228	Portable	30-Nov-13	31-De		
Police Department	BEDP-J-Teel	H18UCF9PW6AN	XTS 5000	7208084	721CHV3836	Portable	30-Nov-13	31-Dec-18	Y	
Police Department	BEDP-959	M20URS9PW1AN	XTL 5000	7207970	500CEL1860	Mobile	30-Nov-13	31-Dec-18	Y	Unable to look up Serial Number, Guess on Model
Police Department	BEDP-CID5	M20URS9PW1AN	XTL 5000	7208038	500CEL1862	Mobile	30-Nov-13	31-Dec-18	Y	Unable to look up Serial Number, Guess on Model
Police Department	BEDP-970	M20URS9PW1AN	XTL 5000	7208039	500CEL1863	Mobile	30-Nov-13	31-Dec-18	Y	Unable to look up Serial Number, Guess on Model
Police Department	BEDP-961	M20URS9PW1AN	XTL 5000	7208053	500CEL1864	Mobile	30-Nov-13	31-Dec-18	Y	Unable to look up Serial Number, Guess on Model
Police Department	BEDP-CID4	M20URS9PW1AN	XTL 5000	7208073	500CEL1865	Mobile	30-Nov-13	31-Dec-18	Y	Unable to look up Serial Number, Guess on Model
Police Department	BEDP-1106	M20URS9PW1AN	XTL 5000	7208077	500CFR0761	Mobile	30-Nov-13	31-Dec-18	Y	
Police Department	BEDP-1002	M20URS9PW1AN	XTL 5000	7208060	500CFT4340	Mobile	30-Nov-13	31-Dec-18	Y	
Police Department	BEDP-1001	M20URS9PW1AN	XTL 5000	7208263	500CGP1274	Mobile	30-Nov-13	31-Dec-18	Y	
Police Department	BEDP-968	M20URS9PW1AN	XTL 5000	7208630	500CHD0277	Mobile	30-Nov-13	31-Dec-18	Y	
Police Department	BEDP-CID3	M20URS9PW1AN	XTL 5000	7208099	500CHF2292	Mobile	30-Nov-13	31-Dec-18	Y	
Police Department	BEDP-CID2	M20URS9PW1AN	XTL 5000	7208098	500CHT1781	Mobile	30-Nov-13	31-Dec-18	Y	
Police Department	BEDP-1003	M20URS9PW1AN	XTL 5000	7208051	500CHT1789	Mobile	30-Nov-13	31-Dec-18	Y	
Police Department	BEDP-937	M20URS9PW1AN	XTL 5000	7208041	500CHT1791	Mobile	30-Nov-13	31-Dec-18	Y	
Police Department	BEDP-956	M20URS9PW1AN	XTL 5000	7208075	500CHT1792	Mobile	30-Nov-13	31-Dec-18	Y	
Police Department	BEDP-1040	M20URS9PW1AN	XTL 5000	7208057	500CHT1798	Mobile	30-Nov-13	31-Dec-18	Y	
Police Department	BEDP-966	M20URS9PW1AN	XTL 5000	7208079	500CHT1802	Mobile	30-Nov-13	31-Dec-18	Y	
Police Department	BEDP-1041	M20URS9PW1AN	XTL 5000	7208031	500CHT1803	Mobile	30-Nov-13	31-Dec-18	Y	
Police Department	BEDP-1001-a	M20URS9PW1AN	XTL 5000	7218648	500CHT1803	Mobile	30-Nov-13	31-Dec-18	Y	
Police Department	BEDP-MC1053	M20URS9PW1AN	XTL 5000	7208042	500CHT1808	Mobile	30-Nov-13	31-Dec-18	Y	
Police Department	BEDP-210-Rear	M20URS9PW1AN	XTL 5000	7208018	500CHT1811	Mobile	30-Nov-13	31-Dec-18	Y	
Police Department	BEDP-MC1050	M20URS9PW1AN	XTL 5000	7208046	500CHT1813	Mobile	30-Nov-13	31-Dec-18	Y	
Police Department	BEDP-995	M20URS9PW1AN	XTL 5000	7208040	500CHT1814	Mobile	30-Nov-13	31-Dec-18	Y	
Police Department	BEDP-996	M20URS9PW1AN	XTL 5000	7208016	500CHT1817	Mobile	30-Nov-13	31-Dec-18	Y	
Police Department	BEDP-101-REAR	M20URS9PW1AN	XTL 5000	7208043	500CHT1819	Mobile	30-Nov-13	31-Dec-18	Y	
Police Department	BEDP-859	M20URS9PW1AN	XTL 5000	7207971	500CKZ1050	Mobile	30-Nov-13	31-Dec-18	Y	
Police Department	BEDP-1100	M20URS9PW1AN	XTL 5000	7208050	500CKZ1051	Mobile	30-Nov-13	31-Dec-18	Y	
Police Department	BEDP-1044	M20URS9PW1AN	XTL 5000	7207996	500CKZ1052	Mobile	30-Nov-13	31-Dec-18	Y	
Police Department	BEDP-931	M20URS9PW1AN	XTL 5000	7218647	500CKZ1052	Mobile	30-Nov-13	31-Dec-18	Y	
Police Department	BEDP-1005	M20URS9PW1AN	XTL 5000	7208045	500CKZ1053	Mobile	30-Nov-13	31-Dec-18	Y	
Police Department	BEDP-1042	M20URS9PW1AN	XTL 5000	7208063	500CKZ1054	Mobile	30-Nov-13	31-Dec-18	Y	
Police Department	BEDP-1004	M20URS9PW1AN	XTL 5000	7208048	500CKZ1055	Mobile	30-Nov-13	31-Dec-18	Y	
Police Department	BEDP-1046	M20URS9PW1AN	XTL 5000	7207997	500CKZ1056	Mobile	30-Nov-13	31-Dec-18	Y	
Police Department	BEDP-166	M20URS9PW1AN	XTL 5000	7208058	500CKZ1057	Mobile	30-Nov-13	31-Dec-18	Y	
Police Department	BEDP-240	M20URS9PW1AN	XTL 5000	7218659	500VKZ1051	Mobile	30-Nov-13	31-Dec-18	Y	
Police Department	BEDP-236	M21URM9PW2AN	XTL 2500	7208061	514CHT4001	Mobile	31-Oct-14	31-Dec-19	Y	
Police Department	BEDP-1007	M21URM9PW2AN	XTL 2500	7208082	514CHT4057	Mobile	31-Oct-14	31-Dec-19	Y	
Police Department	BEDP-CID1	M21URM9PW2AN	XTL 2500	7208097	514CHT4092	Mobile	31-Oct-14	31-Dec-19	Y	
Police Department	BEDP-854	M25URS9PW1AN	APX 6500 AN	7208260	527CPZ0090	Mobile	31-Dec-16	31-Dec-23	Y	
Police Department	BEDP-933	M25URS9PW1AN	APX 6500 AN	7208259	527CPZ0092	Mobile	31-Dec-16	31-Dec-23	Y	
Police Department	BEDP-975	M25URS9PW1AN	APX 6500 AN	7208257	527CPZ2746	Mobile	31-Dec-16	31-Dec-23	Y	
Police Department	BEDP-957	M25URS9PW1AN	APX 6500 AN	7208244	527CPZ2747	Mobile	31-Dec-16	31-Dec-23	Y	
Police Department	BEDP-955	M25URS9PW1AN	APX 6500 AN	7208258	527CPZ2748	Mobile	31-Dec-16	31-Dec-23	Y	
Police Department	BEDP-1026	M25URS9PW1AN	APX 6500 AN	7208148	527CPZ2749	Mobile	31-Dec-16	31-Dec-23	Y	
Police Department	BEDP-C-311	M25URS9PW1AN	APX 6500 AN	7218656	527CTM0202	Mobile	31-Dec-16	31-Dec-23	Y	
Police Department	BEDP-101	M25URS9PW1AN	APX 6500 AN	7208047	527CTM0203	Mobile	31-Dec-16	31-Dec-23	Y	
Police Department	BEDP-210	M25URS9PW1AN	APX 6500 AN	7218658	527CUH2748	Mobile	31-Dec-16	31-Dec-23	Y	
Police Department	BEDP-1045	M21URM9PW2AN	XTL 2500	7208017	624CJH0077	Mobile	31-Oct-14	31-Dec-19	Y	
Police Department	BEDP-1043	M21URM9PW2AN	XTL 2500	7208076	624CJH0134	Mobile	31-Oct-14	31-Dec-19	Y	
Police Department	BEDP-MC1059	M30URS9PW1AN	APX 7500	7207960	656CPT0796	Mobile	1-Jun-17	30-Sep-22	Y	
Public Works	BEDPW-500	H51UCF9PW6AN	APX 4000	7218644	426CQX6314	Portable			N	
Public Works	BEDPW-501	H51UCF9PW6AN	APX 4000	7218645	426CQX6315	Portable			N	
Public Works	BEDPW-406	H51UCF9PW6AN	APX 4000	7208271	426CRV3880	Portable			N	
Public Works	BEDPW-402	H51UCF9PW6AN	APX 4000	7218600	426CRV3881	Portable			N	
Public Works	BEDPW-403	H51UCF9PW6AN	APX 4000	7218625	426CRV3882	Portable			N	
Public Works	BEDPW-504	H51UCF9PW6AN	APX 4000	7218614	426CRV3883	Portable			N	
Public Works	BED-PW-401	H51UCF9PW6AN	APX 4000	7218650	426CRV3884	Portable			N	
Public Works	BEDPW-407	H51UCF9PW6AN	APX 4000	7218603	426CUT2929	Portable			N	
Public Works	BEDPW-409	H51UCF9PW6AN	APX 4000	7208278	426CUT2930	Portable			N	
Public Works	BEDPW-410	H51UCF9PW6AN	APX 4000	7218621	426CUT2931	Portable			N	
Public Works	BEDPW-418	H51UCF9PW6AN	APX 4000	7208277	426CUT2932	Portable			N	
Public Works	BEDPW-508	H51UCF9PW6AN	APX 4000	7218613	426CVT0366	Portable			N	
Public Works	BEDPW-516	H51UCF9PW6AN	APX 4000	7208272	426CVT0367	Portable			N	
Public Works	BEDPW-415	H51UCF9PW6AN	APX 4000	7218610	426CVT0368	Portable			N	
Public Works	BEDPW-423A	H51UCF9PW6AN	APX 4000	7218661	426CVT0369	Portable			N	
Public Works	BEDPW-420	H51UCF9PW6AN	APX 4000	7218624	426CVT0370	Portable			N	
Public Works	BEDPW-422	H51UCF9PW6AN	APX 4000	7218622	426CVT0371	Portable			N	
Public Works	BEDPW-PUBWRKS	H66UCD9PW5BN	XTS 1500	7218608	687CKT1297	Portable	31-Oct-14	31-Dec-19	Y	
Public Works	BEDPW-411	H66UCD9PW5BN	XTS 1500	7218620	687TFC0982	Portable	31-Oct-14	31-Dec-19	Y	
Public Works	BEDPW-503	H66UCD9PW5BN	XTS 1500	7218623	687TFC0985	Portable	31-Oct-14	31-Dec-19	Y	
Public Works	BEDPW-421	H66UCD9PW5BN	XTS 1500	7208276	687TFC0987	Portable	31-Oct-14	31-Dec-19	Y	
Public Works	BEDPW-510	H66UCD9PW5BN	XTS 1500	7218604	687TFC0988	Portable	31-Oct-14	31-Dec-19	Y	
Public Works	BEDPW-425	H66UCD9PW5BN	XTS 1500	7218602	687TFC0990	Portable	31-Oct-14	31-Dec-19	Y	
Public Works	BEDPW-PW	H66UCD9PW5BN	XTS 1500	7218617	687TFC0993	Portable	31-Oct-14	31-Dec-19	Y	
Public Works	BEDPW-426	H66UCD9PW5BN	XTS 1500	7218605	687TFC0994	Portable	31-Oct-14	31-Dec-19	Y	
Public Works	BEDPW-1100	H66UCD9PW5BN	XTS 1500	7218601	687TFC0999	Portable	31-Oct-14	31-Dec-19	Y	

AGENDA

Public Works	BEDPW-413	H66UCD9PW5BN	XTS 1500	7218612	687TFG0041	Portable	31-Oct-14	31-Dec-19	Y	
Public Works	BEDPW-515	H66UCD9PW5BN	XTS 1500	7218611	687TFG0042	Portable	31-Oct-14	31-Dec-19	Y	
Public Works	BEDPW-507	H66UCD9PW5BN	XTS 1500	7218616	687TFG0086	Portable	31-Oct-14	31-Dec-19	Y	
Public Works	BEDPW-506	H66UCD9PW5BN	XTS 1500	7218609	687TFG0090	Portable	31-Oct-14	31-Dec-19	Y	
Public Works	BEDPW-400	H66UCD9PW5BN	XTS 1500	7208279	687TFG0093	Portable	31-Oct-14	31-Dec-19	Y	
Public Works	BEDPW-419	H66UCD9PW5BN	XTS 1500	7218607	687TFQ1139	Portable	31-Oct-14	31-Dec-19	Y	
Public Works	BEDPW-509	H66UCD9PW5BN	XTS 1500	7208275	687TFU1149	Portable	31-Oct-14	31-Dec-19	Y	
Public Works	BEDPW-PW2	H66UCD9PW5BN	XTS 1500	7218618	687TFU1152	Portable	31-Oct-14	31-Dec-19	Y	
Public Works	BEDPW-408	H66UCD9PW5BN	XTS 1500	7208274	687TFU1154	Portable	31-Oct-14	31-Dec-19	Y	
Public Works	BEDPW-416	H66UCD9PW5BN	XTS 1500	7208269	687TFU1155	Portable	31-Oct-14	31-Dec-19	Y	
Public Works	BEDPW-417	H66UCD9PW5BN	XTS 1500	7208266	687TFU1158	Portable	31-Oct-14	31-Dec-19	Y	
Public Works	BEDPW-1105	H66UCD9PW5BN	XTS 1500	7218615	687TFU1169	Portable	31-Oct-14	31-Dec-19	Y	
Public Works	BEDPW-424	H66UCD9PW5BN	XTS 1500	7208273	687TFY4256	Portable	31-Oct-14	31-Dec-19	Y	
Public Works	BEDPW-414	H66UCD9PW5BN	XTS 1500	7208270	687THW7202	Portable	31-Oct-14	31-Dec-19	Y	Unable to look up Serial Number, Guess on model
Public Works	BEDW-L-TRAYLOR	H46UCD9PW5BN	XTS 2500	7208300	205CMX2461	Portable	31-Oct-14	31-Dec-19	Y	
Public Works	BEDPW-PW4	H46UCD9PW5BN	XTS 2500	7218635	205CMX2456	Portable	31-Oct-14	31-Dec-19	Y	
Public Works		H66UCD9PW5BN	XTS 1500	7218606	687TFC0995	Portable	31-Oct-14	31-Dec-19	Y	Lost Radio
MISC	VHF	H98KGH9PW7AN	APX 6000 AN		481CNM4183	Portable	31-Dec-16	31-Dec-23	Y	Needs FPP
MISC	VHF	H98KGH9PW7AN	APX 6000 AN		481CNM3119	Portable	31-Dec-16	31-Dec-23	Y	Needs FPP
MISC	VHF	H98KGH9PW7AN	APX 6000 AN		481CNM4182	Portable	31-Dec-16	31-Dec-23	Y	Needs FPP
MISC	VHF	H98KGH9PW7AN	APX 6000 AN		481CNM3120	Portable	31-Dec-16	31-Dec-23	Y	Needs FPP
MISC	VHF	H98KGH9PW7AN	APX 6000 AN		481CNM3122	Portable	31-Dec-16	31-Dec-23	Y	Needs FPP
MISC	VHF	H98KGH9PW7AN	APX 6000 AN		481CNM3121	Portable	31-Dec-16	31-Dec-23	Y	Needs FPP
Former Motorcycle		M30URS9PW1AN	APX 7500			Mobile	1-Jun-17	30-Sep-22	N	
Former Motorcycle		M30URS9PW1AN	APX 7500			Mobile	1-Jun-17	30-Sep-22	N	
Former Motorcycle		M30URS9PW1AN	APX 7500			Mobile	1-Jun-17	30-Sep-22	N	
Former Motorcycle		M30URS9PW1AN	APX 7500			Mobile	1-Jun-17	30-Sep-22	N	
Former Motorcycle		M30URS9PW1AN	APX 7500			Mobile	1-Jun-17	30-Sep-22	N	

Model Number	Description	Display	Band
H46UCD9PW5BN	XTS 2500		7/800
H98UCF9PW6AN	APX 6000 AN	Model 2.5	7/800
H51UCF9PW6AN	APX 4000		7/800
M28URS9PW1AN	XTL 1500		7/800
L30URS9PW1AN	APX 7500 Consolette		
L20URS9PW1AN	XTL 5000 Consolette		
H46UCF9PW6BN	XTS 2500		
M25URS9PW1AN	APX 6500 AN		
H18UCF9PW6AN	XTS 5000		
M30TSS9PW1AN	APX 7500		
M20URS9PW1AN	XTL 5000		
H97TGD9PW1AN	APX 7000 XE		
M21URM9PW2AN	XTL 2500		
M30URS9PW1AN	APX 7500		
H66UCD9PW5BN	XTS 1500		

AGENDA

Council Agenda Background

PRESENTER: Michael Wells, City Secretary **DATE:** 07/28/20

Minutes

ITEM:

Consider approval of the following City Council minutes:
a) July 13, 2020 executive session
b) July 14, 2020 regular session

DISCUSSION:

N/A

ATTACHMENTS:

July 13, 2020 executive session
July 14, 2020 regular session

Council Minutes July 13, 2020

STATE OF TEXAS §

COUNTY OF TARRANT §

CITY OF BEDFORD §

The City Council of the City of Bedford, Texas, met in Executive Session in the Council Chambers of City Hall, 2000 Forest Ridge Drive, at 8:30 p.m. on the 13th day of July, 2020 with the following members present:

Michael Boyter	Mayor
Tom Burnett	Councilmembers
Dan Cogan	
Ruth Culver	
Amy Sabol	
Rusty Sartor	

constituting a quorum.

Councilmember Gagliardi was absent from the meeting.

CALL TO ORDER

Mayor Boyter called the Executive Session to order at 8:30 p.m.

EXECUTIVE SESSION

- **Pursuant to Section 551.074, personnel matters - City Manager search.**

Council convened in closed section pursuant to 551.074, personnel matters - City Manager search.

Any action necessary as a result of the Executive Session will be taken during the Regular Session at a regularly scheduled Council meeting.

ADJOURNMENT

Mayor Boyter adjourned the Executive Session at 11:04 p.m.

_____

Michael Boyter, Mayor

Council Minutes July 13, 2020

ATTEST:

_____

Michael Wells, City Secretary

Council Minutes July 14, 2020

STATE OF TEXAS §

COUNTY OF TARRANT §

CITY OF BEDFORD §

The City Council of the City of Bedford, Texas, met in Work Session at 5:30 and Regular Session at 7:30 p.m. via videoconference on the 14th day of July, 2020 with the following members present:

Michael Boyter	Mayor
Amy Sabol	Councilmembers
Tom Burnett	
Dan Cogan	
Ruth Culver	
Rusty Sartor	

constituting a quorum.

Councilmember Gagliardi was absent from the meeting.

Staff present included:

Cliff Blackwell	Interim City Manager
Matt Butler	City Attorney
Michael Wells	City Secretary
Chuck Carlisle	Facilities and Risk Manager
Meg Jakubik	Strategic Services Manager
Kenny Overstreet	Public Works Director
Kelly Snook	Interim Capital Projects Director
Bill Syblon	Development Director

WORK SESSION

Mayor Boyter called the Work Session to order at 5:30 p.m.

- **Presentation by David Pettit Economic Development.**

Natalie Moore with David Pettit Economic Development (DPED) stated she and David Pettit were tasked to create a Tax Increment Reinvestment Zone (TIRZ) and GFF Planning is providing master planning services as a sub-consultant under the contract. In June, there was a charrette lead by Brian Moore of GFF Planning and tonight's presentation is the conceptual plan based on feedback from that meeting. They plan to receive the Master Plan in August. Ms. Moore stated that the creation process includes two main documents, the creation ordinance and the financing plan, which is approved by ordinance. The next step is to establish the boundaries for the TIRZ, develop projections for future land uses, draft a financing cash flow model, and develop the TIRZ project and financing plan. Ms. Moore stated there are two ways to create the new tax, through new construction and/or annual appreciation of real property. DPED hopes to bring the creation ordinance, which requires a public hearing, to Council in September.

In response to questions from Council, Mr. Pettit stated that per statute, the Tax Increment Financing (TIF) board is between five to fifteen people, 18 years and older. He stated in Texas, they have found the best practice is that the city council is the board and that each taxing jurisdiction that participates gets one seat on the board. The TIF board is primarily there to finalize the project and financing plan, which is approved by ordinance, and provide recommendations to the city council.

Brian Moore with GFF Planning presented information on the conceptual design and site analysis. He stated he wanted to ensure everyone was on the same page with discussions from the previous meeting; determining reasons for coming to Bedford and what makes it special; desire for a community center, perhaps music-related; making it a smart park; desire for something experiential and entertaining; single family adjacencies versus multi-family, non-traditional single family; and maximize the natural topography of the site. He stated the challenges include no hard corner for visibility of retail and restaurant development, and park space not duplicating the programming at the Boys Ranch Park.

Mr. Moore stated they focused on what makes the site special by focusing on the trees. They divided the area into five zones and highlighted the attributes of each zone to help determine which trees to work around and with. He discussed the different types of uses on the site including townhomes; nontraditional single-family development; retail and experiential oriented restaurants; and family-oriented spill-over space between restaurants. He stated the plan includes a central green space with pavilions off to the side and a strategically located townhome development immediately adjacent.

There was discussion regarding green space; if the park is city or neighborhood oriented; the number of developers that will be involved; multifamily user versus owner-driven user; fire lanes; ADA accessibility in the green space; back entry two-car garages; density; building an attraction site, not a townhome community; creating a community gathering place; various events happening throughout the space; fewer townhomes; adding additional retail; a covered stage; outdoor cinema; and space for food trucks. Mr. Moore stated he would like to add additional programmatic details to the park space and return to Council.

- **Discussion on performing an efficiency study/survey of the City of Bedford organization. **This item requested by Councilmember Sabol.**

Councilmember Sabol stated David Eisenlorh with Bakertilly advised the performance review should be done before the new city manager arrives. The length of time and scope of the project depends on what is required. She stated the study should be considered an operation review, performance study, efficiency study, or transition study. Ms. Sabol stated the organization and operations assessment was closest to what Council had in mind. It includes organizational design, staffing requirements analysis, operational assessment, workforce planning and succession management, and culture and change management. She stated the audit could cost $40,000 to $50,000.

There was discussion regarding gathering more information, getting specific pricing, setting goals for the new city manager, and doing a review on a regular basis.

- **Discuss viability plans for a meeting/entertainment venue(s)to provide a destination and to simultaneously stimulate economic development. *Item requested by Councilmember Sabol**

Council Minutes July 14, 2020

This item was not discussed.

REGULAR SESSION

The Regular Session began at 7:51 p.m.

CALL TO ORDER/GENERAL COMMENTS

Mayor Boyter called the meeting to order.

INVOCATION

Councilmember Sartor gave the invocation.

PLEDGE OF ALLEGIANCE

The Pledges of Allegiance to the flags of the United States and Texas were given.

ANNOUNCEMENTS/UPCOMING EVENTS

No announcements were made.

OPEN FORUM

Nobody signed up to speak during Open Forum.

CONSIDER APPROVAL OF ITEMS BY CONSENT

Motioned by Councilmember Burnett, seconded by Councilmember Cogan to approve following item by consent: 1

Motion approved 6-0-0. Mayor Pro Tem Sabol declared the motion carried.

1. **Consider approval of the following City Council minutes:**
   a) June 2, 2020 work session
   b) June 9, 2020 regular session

This item was approved by consent.

NEW BUSINESS

2. **Public hearing and consider an ordinance to rezone Lot 1A, Block 1, Family Video Addition of Bedford, located at 1600 Bedford Road, Bedford, Texas from Heavy Commercial (H) to Heavy Commercial/Specific Use Permit/Animal Hospital (H/SUP), specific to Section 3.2.C.10.g, Animal Hospitals and Clinics for the care and temporary boarding of domestic household pets, vet offices, clinics, of the City of Bedford Zoning Ordinance, allowing for Bedford Family Vet to operate a veterinary office. The subject property is generally located south of Bedford Road and east of Forest Ridge Drive. (PZ-SUP-2020-50028)**

Development Director Bill Syblon presented information regarding this item, which is to rezone Lot 1A, Block 1 Family Video Addition to allow Bedford Family Vet to operate a veterinary office. He stated that minor interior and exterior changes will be made to the space. Services offered at this location will include veterinary services and temporary boarding of domestic pets.

Mayor Boyter opened the public hearing at 7:56 p.m.

Nobody chose to speak during the public hearing.

Mayor Boyter closed the public hearing at 7:57 p.m.

In response to questions from Council, the architect stated there is no shared HVAC and there is insulation in the walls to control noise from one tenant to the other.

Motioned by Councilmember Sartor, seconded by Councilmember Culver, to approve an ordinance to rezone Lot 1A, Block 1, Family Video Addition of Bedford, located at 1600 Bedford Road, Bedford, Texas from Heavy Commercial (H) to Heavy Commercial/Specific Use Permit/Animal Hospital (H/SUP), specific to Section 3.2.C.10.g, Animal Hospitals and Clinics for the care and temporary boarding of domestic household pets, vet offices, clinics, of the City of Bedford Zoning Ordinance, allowing for Bedford Family Vet to operate a veterinary office. The subject property is generally located south of Bedford Road and east of Forest Ridge Drive. (PZ-SUP-2020-50028)

Motion approved 6-0-0. Boyter declared the motion carried.

3. Consider a resolution of the City Council of the City of Bedford, Texas approving an Economic Development Program Agreement, pursuant to Chapter 380 of the Texas Local Government Code and the City's Economic Development Incentive Policy and Program, with Chick-fil-A, Inc.

Development Director Bill Syblon presented information on this item, which is to approve an Economic Development Program Agreement with Chick-fil-A, Inc. He stated this is a redevelopment of an existing building located at 1805 Central Drive. He stated several utilities, including gas and electric lines, need to be relocated to accommodate construction. Chick-fil-A requests a 380 agreement in the amount of $280,000 to offset the approximately $450,000 it will cost to relocate the utilities, as well as a rebate of permit fees up to $20,000. Additionally, Chick-fil-A has to convert a portion of Plaza Parkway to accommodate parking needs of the restaurant; they will perform the work and request the City to reimburse them in an amount not to exceed $380,000. Chick-fil-A will spend approximately $3,500,000 to redevelop the site, will maintain at least 50 jobs at this location, and can make $4,000,000 in gross revenue at this store.

In response to questions from Council, Mr. Syblon stated approximately $80,000 in sales tax will be generated for the City, in addition to property tax. The estimated timeline for the project is to open January 2022, or possibly the fall of 2021. There was discussion regarding the process of bringing Chick-fil-A to Bedford.

Motioned by Councilmember Cogan, seconded by Councilmember Burnett, to approve a resolution of the City Council of the City of Bedford, Texas approving an Economic Development Program Agreement, pursuant to Chapter 380 of the Texas Local Government Code and the City's Economic Development Incentive Policy and Program, with Chick-fil-A, Inc.

Motion approved 6-0-0. Mayor Boyter declared the motion carried.

4. Consider a resolution of the City Council of the City of Bedford, Texas, directing its designated officer to calculate the voter-approval tax rate in the manner provided for a special taxing unit pursuant to Section 26.04(c-1), Texas Tax Code.

Strategic Services Manager Meg Jakubik presented information on this item, which is to direct the designated officer to calculate the voter-approved tax rate as provided for in Section 26.04(c-1), Texas Tax Code. Ms. Jakubik stated this is a procedural vote to ascertain how Council wants to move forward. When SB 2 revised the tax code and changed the voter approval from 8% to 3.5 percent, it included a provision that would allow an entity to calculate their voter approved rate at 8 percent, if during the current tax year, a disaster was declared for their area. Ms. Jakubik stated Council was not deciding the tax rate but simply a procedural vote on how Council wants the tax rate calculated given the current circumstances with the disaster declaration.

In response to questions from Council, Ms. Jakubik stated the Tarrant County Tax Assessor Collector is the City's designated officer and there is no fiscal impact from the decision made.

Motioned by Councilmember Sabol, seconded by Councilmember Burnett, to approve a resolution directing its designated officer to calculate the voter-approval tax rate in the manner provided for a special taxing unit pursuant to Section 26.04(c-1), Texas Tax Code.

Motion approved 5-1-0. Mayor Boyter declared the motion carried.

Voting in favor of the motion: Mayor Boyter, Councilmember Sartor, Councilmember Cogan, Councilmember Sabol and Councilmember Burnett

Voting in opposition to the motion: Councilmember Culver

5. Consider a resolution approving the logos for Generations Park and the Center.

Interim City Manager Cliff Blackwell presented information on this item, which is to approve the logos for Generations Park and the Center. Mr. Blackwell stated that the submitted logos were ranked the highest among all councilmembers.

Motioned by Councilmember Culver seconded by Councilmember Sabol, to approve a resolution approving the logos for Generations Park and the Center.

Motion approved 4-2-0. Mayor Boyter declared the motion carried.

Voting in favor of the motion: Mayor Boyter, Councilmember Sabol, Councilmember Burnett and Councilmember Culver

Voting in opposition to the motion: Councilmember Sartor and Councilmember Cogan,

6. Consider a resolution authorizing the Interim City Manager to enter into an agreement with I.S. Construction Group, LLC, in an amount not to exceed $228,000, utilizing the Texas Interlocal Purchasing System (TIPS), for a full remodel of four bathrooms, an addition of a men's locker room and an office relocation for the Utility Superintendent at the Public Works Service Center.

Council Minutes July 14, 2020

Public Works Director Kenny Overstreet presented information on this item, which is to authorize the Interim City Manager to enter into an agreement with I.S. Construction Group, LLC to remodel four bathrooms, a men's locker room, and an office relocation at the Public Works Service Center. Mr. Overstreet stated staff began the remodel process two years ago. During that time, a slab leak was identified in the men's restroom and that all restrooms would have to be brought into compliance with the Americans with Disabilities Act (ADA).

In response to questions from Council, Facilities and Risk Manager Chuck Carlisle stated the original quoted amount from FY 2018/19 did not include bringing all bathrooms into compliance with the ADA, as well as the addition of the locker room and an office.

Motioned by Councilmember Burnett seconded by Councilmember Culver, to approve a resolution authorizing the Interim City Manager to enter into an agreement with I.S. Construction Group, LLC, in an amount not to exceed $228,000, utilizing the Texas Interlocal Purchasing System (TIPS), for a full remodel of four bathrooms, an addition of a men's locker room and an office relocation for the Utility Superintendent at the Public Works Service Center.

Motion approved 6-0-0. Mayor Boyter declared the motion carried.

7. Mayor/Council Member Reports

There were no reports.

EXECUTIVE SESSION

a) Pursuant to Section 551.074, personnel matters - City Manager search.
b) Pursuant to Section 551.072, to deliberate the purchase, exchange, lease or value of real property - Block 2, Lot 1, Bedford Baptist Temple Sub.
c) Pursuant to Section 551.0087, deliberation regarding economic development negotiations relative to Plaza Center Addition Lot AR1A and Bedford Plz Addition 1989H Blk A Lot 4B1.

Council convened into Executive Session pursuant to Texas Government Code Section 551.074, personnel matters – City Manager search; Section 551.072, to deliberate the purchase, exchange, lease or value of real property - Block 2, Lot 1, Bedford Baptist Temple Sub.; and Section 551.0087, deliberation regarding economic development negotiations relative to Plaza Center Addition Lot AR1A and Bedford Plz Addition 1989H Blk A Lot 4B1, at 8:39 p.m.

Council reconvened from Executive Session at 9:03 p.m. Any necessary action to be taken as a result of the Executive Session will be during the Regular Session.

9. Take any action necessary as a result of the Executive Session.

No action was taken as a result of the Executive Session.

ADJOURNMENT

Mayor Boyter adjourned the meeting at 9:03 p.m.

Council Minutes July 14, 2020

_____
Michael Boyter, Mayor

ATTEST:

_____
Michael Wells, City Secretary

AGENDA

Council Agenda Background

PRESENTER: William Syblon, Development Director
Andrew Kloefkorn, Neighborhood Services Manager.

DATE: 07/28/20

Council Mission Area: Provide a safe and friendly community environment.

ITEM:

Consider an Ordinance amending Chapter 54, "Environment" of the City of Bedford Code of Ordinances by amending Sections 54-67 through 54-68, providing for a penalty clause; providing for a repealing clause; providing for a severability clause; and declaring an effective date.

City Attorney Review: Yes

SUMMARY:

This item is to amend the City of Bedford Nuisance Ordinance to more specifically define what constitutes a nuisance.

BACKGROUND:

During the Tuesday, June 23, 2020 City Council meeting, Council discussed possible changes to the Nuisance Ordinance, with the input from a citizen. During the meeting, the possibility of holding a work session to discuss these changes was also discussed. Soon after the meeting, further correspondence was held with a request to place these changes on a regular Council meeting in August. On June 9, 2020, that request was amended to bring the item forward at the end of July. The revisions to the Ordinance are a result of a collaboration between staff and the City Attorney's office. It has been confirmed that this ordinance would allow enforcement of currently existing conditions.

The following reflects the changes being proposed:

From Section 54-67

Trash/debris means all solid waste; garbage; trash; litter; junk; tin cans; bottles; papers; grass and weed cuttings; tree limbs; brush; wood or building materials; discarded fences; discarded vehicle parts; tires; wreckage; ~~abandoned,~~ operable or inoperable household fixtures that are not designed for outdoor use, including but not limited to, plumbing apparatus, electrical equipment, machinery, containers, ~~moveable~~ furniture, and appliances; equipment; tools; machines; broken or discarded furniture; and other forms of household effects on private or public property that contribute to urban blight.

Waste means regarded or discarded as worthless or useless, unwanted or unusable material.

From Section 54-68

- Declaration of nuisance.

The following are declared to be a nuisance and shall be abated, and any persons guilty of performing or causing any such nuisance, or permitting or suffering such on any property or to remain upon

said property or in any structure, building occupied by or controlled by such persons or on any public street immediately adjacent to such premises shall be deemed guilty.

(1) Any property, buildings, structures or places containing indoor or outdoor accumulations of garbage, weeds, water, junk, trash and debris, stagnant liquids, flammable liquids, or other deposits or substances which are likely to become unwholesome, filthy, unsightly, offensive, ~~or~~ unsanitary and ~~or~~ likely to create or engender disease, or which contributes to urban blight.
Exception: Operable fixtures and/or appliances used for rear and side yard "outdoor kitchens" accessory to the principal structure and screened from public view.

RECOMMENDATION:

Staff recommends the following motion:

Approval of an ordinance amending Chapter 54, "Environment" of the City of Bedford Code of Ordinances by amending Sections 54-67 through 54-68, providing for a penalty clause; providing for a repealing clause; providing for a severability clause; and declaring an effective date.

FISCAL IMPACT:

N/A

ATTACHMENTS:

Amended Nuisance Ordinance
Redline Ordinance

ORDINANCE NO. 2020-

AN ORDINANCE AMENDING CHAPTER 54 "ENVIRONMENT" OF THE CITY OF BEDFORD CODE OF ORDINANCES BY AMENDING SECTIONS 54-67 THROUGH 54-68, PROVIDING FOR A PENALTY CLAUSE; PROVIDING FOR A REPEALING CLAUSE; PROVIDING FOR A SEVERABILITY CLAUSE; AND DECLARING AN EFFECTIVE DATE.

WHEREAS, the City of Bedford desires to protect the life, health and property of the citizens and businesses of the City of Bedford; and,

WHEREAS, cleanliness and aesthetics are important to the health, safety and welfare of the citizens, businesses and visitors of the City of Bedford; and,

WHEREAS, the City of Bedford supports the regulation of nuisances.

NOW, THEREFORE, BE IT ORDAINED BY THE CITY COUNCIL OF THE CITY OF BEDFORD, TEXAS:

SECTION 1. **That all matters stated in the preamble are hereby found to be true and correct and are incorporated herein by reference as if copied in their entirety.**

SECTION 2. **That Chapter 54 "Environment," Sections 54-67 through 54-68 are amended as set forth below and are adopted to read as follows:**

Sec. 54-67. - Definitions.

[The following words, terms and phrases, when used in this article, shall have the meanings ascribed to them in this section, except where the context clearly indicates a different meaning.]

Code enforcement official means the chief of police, building official, fire marshal, code enforcement official, health inspector or their designated representatives, charged with any enforcement and administration of this article.

Exterior property area means the open space or non-inhabited or occupied areas on the premises.

Foul means offensive to the senses, revolting, having an offensive odor, smelly, rotten or putrid, all waste, and body waste, including animal and vegetable waste resulting from handling, preparation, cooking, storage or consumption of food.

Garbage means all waste including animal and vegetable waste, dead animals, food, any matter that is no longer wanted or needed, anything that is worthless of nominal value, inferior, or vile.

Graffiti means the unauthorized application of paint, ink, chalk, dye or other similar substance, or other inscribed or engraved material on public or private structures located on publicly or privately owned real property within the city that is not authorized by law.

High grass and weeds means any vegetation that because of its height is objectionable, unsightly or unsanitary which contributes to urban blight and endangers the public safety by creating a fire hazard, excluding: shrubs; bushes, trees, cultivated flowers, gardens, and cultivated crops.

Nuisance means any condition, object, material, matter or light or noise as defined by city ordinance that is offensive, dangerous or detrimental to human life, safety or health; or that renders property, the ground, the water, the air or food a hazard or likely to cause injury to human life or health; or that threatens to become detrimental to the public health and be of an impure or unwholesome matter of any kind, or contributes to urban blight and any objectionable, unsightly, or unsanitary matter.

Trash/debris means all solid waste; garbage; trash; litter; junk; tin cans; bottles; papers; grass and weed cuttings; tree limbs; brush; wood or building materials; discarded fences; discarded vehicle parts; tires; wreckage; operable or inoperable household fixtures that are not designed for outdoor use, including but not limited to, plumbing apparatus, electrical equipment, machinery, containers, furniture, and appliances; equipment; tools; machines; broken or

discarded furniture; and other forms of household effects on private or public property that contribute to urban blight.

Waste means regarded or discarded as worthless or useless, unwanted or unusable material.

'Sec. 54-68. - Declaration of nuisance.

The following are declared to be a nuisance and shall be abated, and any persons guilty of performing or causing any such nuisance, or permitting or suffering such on any property or to remain upon said property or in any structure, building occupied by or controlled by such persons or on any public street immediately adjacent to such premises shall be deemed guilty.

(1) Any property, buildings, structures or places containing indoor or outdoor accumulations of garbage, weeds, water, junk, trash and debris, stagnant liquids, flammable liquids, or other deposits or substances which are likely to become unwholesome, filthy, unsightly, offensive, unsanitary and likely to create or engender disease, or which contributes to urban blight.

Exception: Operable fixtures and/or appliances used for rear and side yard "outdoor kitchens" accessory to the principal structure and screened from public view.

(2) Discharging of any sewage waste directly or indirectly onto the ground or into any stream, creek, waterway or other body of water.

(3) Permitting any property, tank, pond, alley, gutter, swimming pool, or open receptacle containing water, or a source of water to become stagnant, foul, nauseous, offensive or unpleasant, or provide harborage for mosquitoes, flies, or other insects.

(4) Maintaining a swimming pool with impaired visibility of upper and/or lower drain(s) or in an unsafe, unsecured, unclean or unsanitary condition.

(5) Any person who owns or occupies any property with a swimming pool to discharge water from the swimming pool onto the property of another, or to drain the pool in such a way as to drain onto the property of another without consent of adjoining property owner.

(6) Permitting the accumulation, dumping or the burial of garbage, trash and debris, building materials, discarded furniture, tree limbs, household waste items, ashes, inoperable household appliances, vehicle tires, scrap metal, or automobile parts on any private property and/or depositing the same onto any private property, public right-of-way or public property or the dumping or burying of used motor oils or any other chemical substance which is not permitted by the state commission on environmental quality directly onto or into the ground.

(7) Permitting a lawn irrigation system to spray or overflow water onto a public sidewalk or public street during periods of freezing weather when such water freezes and results in a potentially dangerous condition.

(8) Allowing, generating or fostering any unreasonably loud, disturbing, or unnecessary noise in violation of the city ordinances which causes distress, discomfort or injury to persons in the immediate vicinity thereof.

(9) Any property where rats or vermin breed or are harbored.

(10) Any object or article placed, planted or allowed to grow upon or over any public street or sidewalk, except such as are permitted by ordinance of this city, in such manner as to obstruct or hinder the free passage upon such public street or sidewalk.

(11) The act of sweeping or depositing any trash and debris onto any public street or other public place and allowing the same to remain in such place.

(12) To create or allow graffiti that is visible from a public place or public right-of-way.

(13) The act of scattering, distributing, or affixing any advertisements, circulars, handbills, printed or written announcements, or paper of like character, upon the public streets, within or on

public buildings, signs, monuments, or grounds within the city, except as provided by the city's sign ordinance or other law.

(14) The act of permitting light or lights to directly illuminate or shine upon a dwelling on a property of another after 11:00 p.m. in such a manner as to cause distress, discomfort or injury to persons, except with the express consent of such other person. This article shall not apply to lights maintained or controlled by the city upon its own property or property under its control or upon any street or alley of the city.

(15) No vehicle shall be used for living, sleeping, home occupation, or household purposes when parked or stored on commercial or residential property.

(16) Any tree and/or shrubbery allowed to grow onto or over a public street, except such as are permitted by ordinance of this city, in such manner as to obstruct or hinder the free passage of vehicles including but not limited to fire, police, emergency and non-emergency vehicles must maintain a minimum clear space between the street and lowest portion of the tree limbs of at least 14 feet above the public street and gutter.

SECTION 4. **That this Ordinance shall be cumulative of all other Ordinances and shall not repeal any of the provisions of such Ordinances except for those instances where there are direct conflicts with the provisions of this Ordinance. Ordinances or parts thereof in force at the time this Ordinance shall take effect and that are inconsistent with this Ordinance are hereby repealed to the extent that they are inconsistent with this Ordinance.**

SECTION 5. **If any section, article, paragraph, sentence, clause, phrase or word in this Ordinance, or application thereof to any person or circumstance, is held invalid or unconstitutional by a Court of competent jurisdiction, such holding shall not affect the validity of the remaining portions of the Ordinance, and the City Council hereby declares it would have passed such remaining portion of the Ordinance despite such invalidity, which remaining portions shall remain in full force and effect.**

SECTION 6. **That any person, organization, corporation, partnership or entity that violates, disobeys, omits, neglects or fails to comply with the provisions of this ordinance shall be fined not more than two thousand dollars ($2000.00) for each offense or violation. Each day that an offense or violation occurs shall constitute a separate offense.**

SECTION 7. **This Ordinance shall take effect from and after its date of passage in accordance with the laws of the State of Texas.**

PRESENTED AND PASSED on this 28th day of July, 2020, by a vote of ___ayes, ___nays and ___ abstentions, at a regular meeting of the City Council of the City of Bedford, Texas.

_____

Michael Boyter, Mayor

ATTEST:

_____

Michael Wells, City Secretary

ORDINANCE NO. 2020-

APPROVED AS TO FORM:

_____

Stan Lowry, City Attorney

AGENDA

ARTICLE III. - NUISANCES[2]

Cross reference— Animal nuisances prohibited, § 18-133; civil emergencies, ch. 34; abandoned and junked motor vehicles, § 114-316 et seq.

State Law reference— Authority of city to define, prohibit and abate nuisances, V.T.C.A., Local Government Code § 217.042; nuisances and general sanitation, V.T.C.A., Health and Safety Code § 341.011 et seq.

Sec. 54-67. - Definitions.

[The following words, terms and phrases, when used in this article, shall have the meanings ascribed to them in this section, except where the context clearly indicates a different meaning.]

Code enforcement official means the chief of police, building official, fire marshal, code enforcement official, health inspector or their designated representatives, charged with any enforcement and administration of this article.

Exterior property area means the open space or non-inhabited or occupied areas on the premises.

Foul means offensive to the senses, revolting, having an offensive odor, smelly, rotten or putrid, all waste, and body waste, including animal and vegetable waste resulting from handling, preparation, cooking, storage or consumption of food.

Garbage means all waste including animal and vegetable waste, dead animals, food, any matter that is no longer wanted or needed, anything that is worthless of nominal value, inferior, or vile.

Graffiti means the unauthorized application of paint, ink, chalk, dye or other similar substance, or other inscribed or engraved material on public or private structures located on publicly or privately owned real property within the city that is not authorized by law.

High grass and weeds means any vegetation that because of its height is objectionable, unsightly or unsanitary which contributes to urban blight and endangers the public safety by creating a fire hazard, excluding: shrubs; bushes, trees, cultivated flowers, gardens, and cultivated crops.

Nuisance means any condition, object, material, matter or light or noise as defined by city ordinance that is offensive, dangerous or detrimental to human life, safety or health; or that renders property, the ground, the water, the air or food a hazard or likely to cause injury to human life or health; or that threatens to become detrimental to the public health and be of an impure or unwholesome matter of any kind, or contributes to urban blight and any objectionable, unsightly, or unsanitary matter.

Trash/debris means all solid waste~~s~~;~~,~~ ~~including~~ garbage;~~,~~ trash;~~,~~ litter;~~,~~ junk;~~,~~ tin cans;~~,~~ bottles;~~,~~ papers;~~,~~ grass and weed cuttings;~~,~~ tree limbs;~~,~~ brush;~~,~~ wood or building materials;~~,~~ discarded fences;~~,~~ discarded vehicle parts;~~,~~ tires;~~,~~ wreckage;~~,~~ ~~abandoned,~~ operable or inoperable household fixtures that are not designed for outdoor use, ~~and appliances~~ including but not limited to,~~;~~ plumbing apparatus, electrical equipment, ~~and mechanical~~ machinery, containers, ~~moveable~~ furniture, and~~/or~~ appliances ~~not designed for or modified to withstand the elements and outdoor use~~;~~,~~ equipment;~~,~~ tools;~~,~~ machines;~~,~~ broken or discarded furniture; and other forms of household effects ~~that are~~ on private or public property ~~and~~ that contribute~~s~~ to urban blight~~, or have been abandoned and allowed to accumulate on private or public property or which and contributes to urban blight~~.

Waste means regarded or discarded as worthless or useless, unwanted or unusable material.

‘Sec. 54-68. - Declaration of nuisance.

The following are declared to be a nuisance and shall be abated, and any persons guilty of performing or causing any such nuisance, or permitting or suffering such on any property or to remain upon said property or in any structure, building occupied by or controlled by such persons or on any public street immediately adjacent to such premises shall be deemed guilty.

(1) Any property, buildings, structures or places containing indoor or outdoor accumulations of garbage, weeds, water, junk, trash and debris, stagnant liquids, flammable liquids, or other deposits or substances which are likely to become unwholesome, filthy, unsightly, offensive, ~~or~~ unsanitary and ~~or~~ likely to create or engender disease, or which contributes to urban blight.

Exception: Operable fixtures and/or appliances used for rear and side yard “outdoor kitchens” accessory to the principal structure and screened from public view.

(2) Discharging of any sewage waste directly or indirectly onto the ground or into any stream, creek, waterway or other body of water.

(3) Permitting any property, tank, pond, alley, gutter, swimming pool, or open receptacle containing water, or a source of water to become stagnant, foul, nauseous, offensive or unpleasant, or provide harborage for mosquitoes, flies, or other insects.

(4) Maintaining a swimming pool with impaired visibility of upper and/or lower drain(s) or in an unsafe, unsecured, unclean or unsanitary condition.

(5) Any person who owns or occupies any property with a swimming pool to discharge water from the swimming pool onto the property of another, or to drain the pool in such a way as to drain onto the property of another without consent of adjoining property owner.

(6) Permitting the accumulation, dumping or the burial of garbage, trash and debris, building materials, discarded furniture, tree limbs, household waste items, ashes, inoperable household appliances, vehicle tires, scrap metal, or automobile parts on any private property and/or depositing the same onto any private property, public right-of-way or public property or the dumping or burying of used motor oils or any other chemical substance which is not permitted by the state commission on environmental quality directly onto or into the ground.

(7) Permitting a lawn irrigation system to spray or overflow water onto a public sidewalk or public street during periods of freezing weather when such water freezes and results in a potentially dangerous condition.

(8) Allowing, generating or fostering any unreasonably loud, disturbing, or unnecessary noise in violation of the city ordinances which causes distress, discomfort or injury to persons in the immediate vicinity thereof.

(9) Any property where rats or vermin breed or are harbored.

(10) Any object or article placed, planted or allowed to grow upon or over any public street or sidewalk, except such as are permitted by ordinance of this city, in such manner as to obstruct or hinder the free passage upon such public street or sidewalk.

(11) The act of sweeping or depositing any trash and debris onto any public street or other public place and allowing the same to remain in such place.

(12) To create or allow graffiti that is visible from a public place or public right-of-way.

(13) The act of scattering, distributing, or affixing any advertisements, circulars, handbills, printed or written announcements, or paper of like character, upon the public streets, within or on public buildings, signs, monuments, or grounds within the city, except as provided by the city's sign ordinance or other law.

(14) The act of permitting light or lights to directly illuminate or shine upon a dwelling on a property of another after 11:00 p.m. in such a manner as to cause distress, discomfort or injury to persons, except with the express consent of such other person. This article shall not apply to lights maintained or controlled by the city upon its own property or property under its control or upon any street or alley of the city.

(15) No vehicle shall be used for living, sleeping, home occupation, or household purposes when parked or stored on commercial or residential property.

(16) Any tree and/or shrubbery allowed to grow onto or over a public street, except such as are permitted by ordinance of this city, in such manner as to obstruct or hinder the free passage of vehicles including but not limited to fire, police, emergency and non-emergency vehicles must maintain a minimum clear space between the street and lowest portion of the tree limbs of at least 14 feet above the public street and gutter.

(Ord. No. 12-3039 , § 1, 10-23-12)

AGENDA

Council Agenda Background

PRESENTER: Kelly Snook, Projects Manager
Don Henderson, Parks Superintendent

DATE: 07/28/20

Council Mission Area: Be responsive to the needs of the community.

ITEM:

Consider a resolution authorizing the Interim City Manager to purchase a Community Service Maintenance Storage Building, in the amount of $241,680, through the Buy Board Cooperative Purchasing Program.

City Attorney Review: N/A

DISCUSSION:

A discussion on the need of a storage building has been ongoing since the early design stages of the renovations at Generations Park. The storage building will serve Community Services and the Police Department. The building will store the holiday decorations, recreation equipment, tables, chairs, generators, special events equipment, Police patrol cart, and other City property as needed.

Below is a summary of the Community Service Maintenance Storage Building proposal:

Storage Building:	$49,710
Initial Site Prep:	$12,510
Install Site Grading:	$3,575
Install Concrete Slab:	$85,950
Install Concrete Flatwork:	$19,690
Install Park Building:	$35,210
Install Electrical:	$27,785
Performance Bond:	$7,250
Total cost:	$241,680

Funding for this project will come from Series 2018 GO Bond in a total amount of $241,680.

RECOMMENDATION:

Staff recommends the following motion:

Approval of a resolution authorizing the Interim City Manager to purchase a Community Service Maintenance Storage Building, in the amount of $241,680, utilizing the Buy Board Cooperative Purchasing Program.

FISCAL IMPACT:

Series 2018 GO Bond	$241,680

ATTACHMENTS:

Resolution
Site Plan
Bid Quote

AGENDA

RESOLUTION NO. 2020-

A RESOLUTION AUTHORIZING THE INTERIM CITY MANAGER TO PURCHASE A COMMUNITY SERVICE MAINTENANCE STORAGE BUILDING, IN THE AMOUNT OF $241,680, THROUGH THE BUY BOARD COOPERATIVE PURCHASING PROGRAM.

WHEREAS, the City Council of Bedford, Texas determines the necessity to purchase a Community Service Maintenance Storage Building; and,

WHEREAS, the Community Service Building will be used to house equipment and materials for the Community Services and the Police Departments; and,

WHEREAS, in order to obtain best pricing, the purchase of the Community Service Maintenance Storage Building will be purchased from the Buyboard Cooperative Purchasing; and,

WHEREAS, the City Council of Bedford, Texas authorizes the Interim City Manager to purchase the Community Service Maintenance Storage Building in the amount of $241,680.

NOW, THEREFORE, BE IT RESOLVED BY THE CITY COUNCIL OF THE CITY OF BEDFORD, TEXAS:

SECTION 1. **That the findings above are found to be true and correct, and are incorporated herein.**

SECTION 2. **That the City Council does hereby authorize the Interim City Manager to purchase a Community Service Maintenance Storage Building.**

SECTION 3. **That the total cost of the Community Service Maintenance Storage Building is $241,680.**

SECTION 4. **That the funding will come from the Series 2018 GO Bonds.**

PRESENTED AND PASSED this 28th day of July 2020, by a vote of __ ayes, __ nays and __ abstentions, at a regular meeting of the City Council of the City of Bedford, Texas.

_____

Michael Boyter, Mayor

ATTEST:

_____

Michael Wells, City Secretary

AGENDA

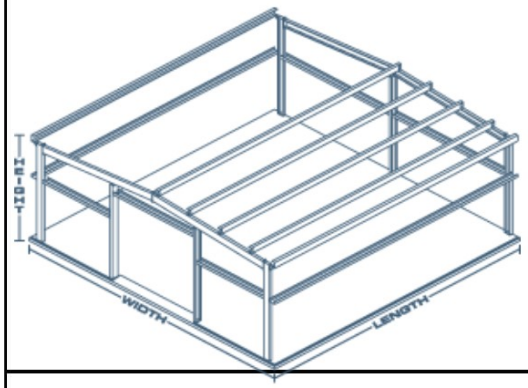

U.S. POST OFFICE

200 AMP ELECTRICAL PANEL

36" ENTRY DOOR

10' X 10' ROLL UP DOOR

8' X 8' ROLL UP DOOR

12' WIDE DRIVE W/APPROACH

Area: New Area

Fill Material	Area	Units
concrete	2031.38	Sq/Ft

PRIVATE DR.

DOUG RIVERS DR

NORTH

AGENDA

INSITE AMENITIES

9176 Hyde Road
Ft. Worth, TX 76179

ph 817-236-5439
fax 817-236-8350

Quotation

Original Quote Date	Quotation #
7/15/2020	949

Name / Address	Customer Contact	Customer Phone
City of Bedford 2000 Forest Ridge Drive Bedford, TX 76021	Don Henderson	817-952-2308
		Customer Fax

Quote Revised	Terms	FOB	Project Name
7/22 rev site plan+gutter	Net 30	Factory	Park Maint. Storage Bldg.

Item	Description	Qty	Rate	Total
PARK BUILDING	PARK MAINTENANCE STORAGE BUILDING - Metal Mart 60 x 90 x 16 building with (1) 36" Entry Door; (1) 10' x 10' Roll-Up Door, and (1) 8' x 8' Roll-Up Door; 3" reinforced vinyl back insulation, and gutters/downspouts. Multi-rib metal wall and roof panels with 30-yr Siliconized Polyester finish in standard colors as selected by Owner.	1	49,710.00	49,710.00
INSTALL	INSTALL SITE PREP - Clear and grub grass from site; cut 6" of top soil and stockpile; install flex base material in 6" lifts; compact each lift. NOTE: Tree work and/or removal by Bedford Parks Dept.	1	12,510.00	12,510.00
INSTALL	INSTALL SITE GRADING - Backfill around pad with excavated materials and top with the existing top soil. Clean up and grade the disturbed area.	1	3,575.00	3,575.00
INSTALL	INSTALL CONCRETE FLATWORK - Install 12' wide drive/2,056 SF drive flatwork and concrete drive approach with 10' radii: excavate 5" deep; set forms for 5" concrete; install #4 rebar at 24" OCEW; pour 3500 PSI concrete.	1	19,690.00	19,690.00
INSTALL	INSTALL CONCRETE SLAB - Install 5,400 SF post-tensioned concrete slab: excavation of perimeter beam and interior beams at 12' OCEW and set forms for 5" concrete; install a post-tension system at 48" OCEW with #4 rebar corner bracing; install service stub ups; pour 3500 PSI concrete in footings and slab.	1	85,950.00	85,950.00
INSTALL	INSTALL PARK BUILDING - Install 60x90x16 Park Storage Building structure, insulation, doors and gutters/downspouts.	1	35,210.00	35,210.00
INSTALL	INSTALL ELECTRICAL - Install electrical including 200-amp single phase panel and meter, 2" weather head and riser, (8) quad GFCI receptacles, (6) wall packs, and (15) LED high bay fixtures with motion sensors	1	27,785.00	27,785.00
BOND FEES	Performance and Payment Bond Fees		7,250.00	7,250.00
BBCOMGROUP	BuyBoard Commodity Group # 592-19, Parks & Recreation & Field Lighting Products & Installation			

	Subtotal	$241,680.00
	Sales Tax (6.25%)	$0.00
This quote is valid for 30 days.	**Total**	$241,680.00

Signature _____ Date _____

By signing you agree to our terms.

AGENDA

Council Agenda Background

PRESENTER: Kelly Snook, Interim Capital Projects Director **DATE:** 07/28/20

Council Mission Area: Provide a safe and friendly community environment.

ITEM:

Consider a resolution authorizing the Interim City Manager to enter into an agreement with Custard Construction Services, in the amount of $60,572.36, utilizing the Texas Interlocal Purchasing System (TIPS), for the abatement of Asbestos Containing Material (ACM) in the six structures to be demolished at Generations Park.

City Attorney Review: N/A

SUMMARY:

Through the design of Phase Next for Generations Park (previously Boys Ranch Park) it was determined that six structures will be demolished for new construction. These structures are the Boys Ranch Activity Center, Theater Building, Seniors Building, Arts Building, Clubhouse for Special Needs and the Concession Building.

BACKGROUND:

On January 16, 2020, Contract Amendment #3 between the City of Bedford and Halff Associates, Inc. was executed providing for a Generations Park asbestos survey. A survey for asbestos containing materials is required under Texas Department of State Health Services (DSHS) rules when a building will be renovated or demolished.

The structures to be demolished and therefore, required to have an asbestos survey, include:

- Recreation Center and Gym at 2801 Forest Ridge Drive
- Clubhouse for Special Needs Building/Daycare at 1308 Harwood Road
- Bedford Splash Waterpark at 2817 R.D. Hurt Parkway
- Theater Building at 2821 Forest Ridge Drive
- Arts Building at 2819 R.D. Hurt Parkway
- Bedford Senior Center at 2817 R.D. Hurt Parkway
- Concession Stand, In-Line Skate Rink, and four covered pavilions

The report noted the presence of Asbestos Containing Material (ACM) in the following locations:

- Recreation Center and Gym: Ceiling plaster texture, 2,000sf
  Window caulking, 30sf
- Special Needs Building: Floor tile and mastic, 5,600sf
- Theater Building: Black mastic under tile or carpet, 2,530sf
  Roofing mastic, 450sf
- Arts Building: Sheetrock/Joint Compound/Texture, 1,425sf
- Bedford Senior Center: Floor tile, sheet flooring, 4,250sf
- Concession Stand: Ceiling Board, 250sf
  Roofing Mastic, 250sf

Four bids were received by the Interim Capital Projects Director for the proposed abatement, with the lowest bid of $60,572.36, submitted by Custard Construction Services, a participating vendor with the Texas Interlocal Purchasing System (TIPS). Staff recommends utilizing Custard Construction Services to execute the abatement. This company is based out of Flower Mound, Texas and holds a

Texas Historically Underutilized Business (HUB) certificate. This certificate is issued by the State of Texas to businesses that are certified as minority, woman, and service-disabled veteran-owned businesses.

If approved, the project will be paid out of the Series 2018 GO Bonds.

RECOMMENDATION:

Staff recommends the following motion:

Approval of a resolution authorizing the Interim City Manager to enter into an agreement with Custard Construction Services, in the amount of $60,572.36, utilizing the Texas Interlocal Purchasing System (TIPS), for the abatement of ACM in six structures at Generations Park.

FISCAL IMPACT:

Series 2018 GO Bonds:	**$60,572.36**

ATTACHMENTS:

Resolution
Halff Asbestos Survey
TIPS Vendor Agreement
Bid Proposal

AGENDA

RESOLUTION NO. 20-

A RESOLUTION AUTHORIZING THE INTERIM CITY MANAGER TO ENTER INTO AN AGREEMENT WITH CUSTARD CONSTRUCTION SERVICES, IN THE AMOUNT OF $60,572.36, UTILIZING THE TEXAS INTERLOCAL PURCHASING SYSTEM (TIPS), FOR THE ABATEMENT OF ASBESTOS CONTAINING MATERIAL (ACM) IN THE SIX STRUCTURES TO BE DEMOLISHED AT GENERATIONS PARK.

WHEREAS, the City Council of Bedford, Texas determines the necessity to obtain asbestos abatement services for structures in Generations Park; and,

WHEREAS, the abatement is in accordance with the asbestos containing materials survey conducted by Halff Associates, Inc. required under Texas Department of State Health Services (DSHS) rules when a building will be renovated or demolished; and,

WHEREAS, in order to obtain best pricing, the purchase of the asbestos abatement may be purchased from the Texas Interlocal Purchasing System; and,

WHEREAS, the City Council of Bedford, Texas to authorize the Interim City Manager to enter into a contract for asbestos abatement services, in the amount of $60,572.36, with Custard Construction Services.

NOW, THEREFORE, BE IT RESOLVED BY THE CITY COUNCIL OF THE CITY OF BEDFORD, TEXAS:

SECTION 1. **That the findings above are found to be true and correct.**

SECTION 2. **That the City Council does hereby authorize the Interim City Manager to contract for asbestos abatement services for six structures at Generations Park with Custard Construction Services.**

SECTION 3. **That the total cost of the asbestos abatement services is $60,572.36.**

SECTION 4. **That the funding will come from the Series 2018 GO Bonds.**

PRESENTED AND PASSED this 28th day of July 2020, by a vote of __ ayes, __ nays and __ abstentions, at a regular meeting of the City Council of the City of Bedford, Texas.

_____

Michael Boyter, Mayor

ATTEST:

_____

Michael Wells, City Secretary

AGENDA

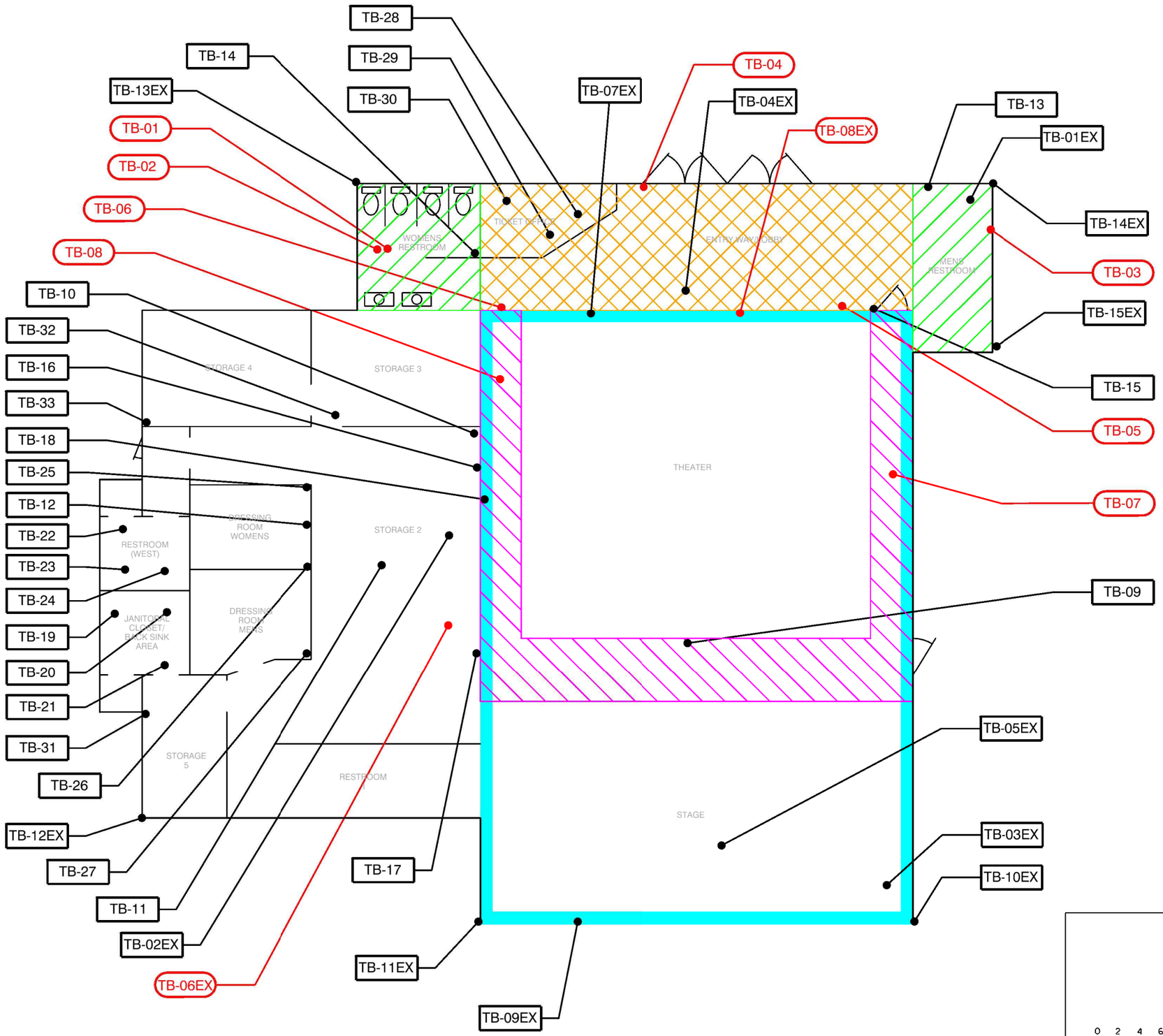

EXPLANATION:

- xx-xx — NO ASBESTOS DETECTED
- xx-xx — POSITIVE SAMPLE
- 5% CHRYSOTILE - BLACK MASTIC UNDER CERAMIC TILE
- 3 - 5% CHRYSOTILE - FLOOR TILE & BLACKMASTIC UNDER CARPET
- 5% CHRYSOTILE - BLACK MASTIC UNDER CARPET
- 5% CHRYSOTILE - ROOFING MASTIC ON PARAPET WALL

N

0 2 4 6 8 10 15 20 30
SCALE IN FEET

HALFF®
1201 NORTH BOWSER ROAD
RICHARDSON, TEXAS 75081-2275
TEL (214) 346-6200
FAX (214) 739-0095

ACM/SAMPLE LOCATION MAP
THEATER
2821 FOREST RIDGE DRIVE

Project No.:	34405.003
Issued:	2/2020
Drawn By:	AGH
Checked By:	M.T.

Sheet Title

ACM/SAMPLE LOCATION MAP
THEATER
2821 FOREST RIDGE DRIVE

Figure 2

I:\34000s\34405\003\CADD\2821 FORREST RIDGE RD..dgn

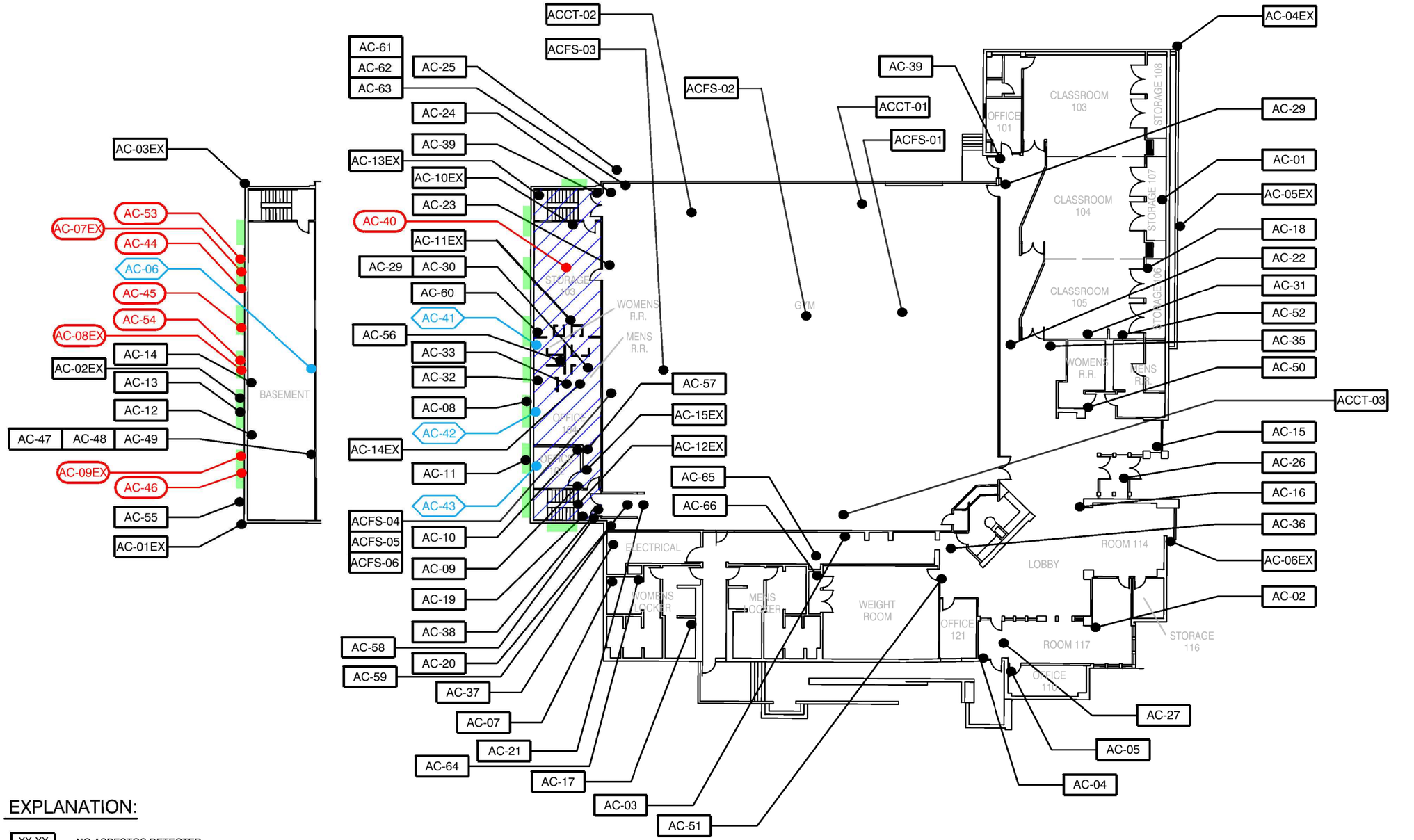

EXPLANATION:

- XX-XX — NO ASBESTOS DETECTED
- AC-53 — ASBESTOS CONTAINING MATERIAL
- AC-41 — < 1% ASBESTOS CONTAINING MATERIAL
- 2% - 3% CHRYSOTILE - CAULK/GLAZING ON WINDOW/FRAMES
- 2% CHRYSOTILE - PAINT TEXTURE ON PLASTER CEILINGS

N

0 6 12 18 24 30 45 60 90
WCALE IN FEET

HALFF®
1201 NORTH BOWSER ROAD
RICHARDSON, TEXAS 75081-2275
TEL (214) 346-6200
FAX (214) 739-0095

ACM/SAMPLE LOCATION MAP
ACTIVITY CENTER/GYMNASIUM
2801 FOREST RIDGE DRIVE
BEDFORD, TEXAS

Project No.:	34405.003
Issued:	4/2020
Drawn By:	AGH
Checked By:	M.T.

Sheet Title

ACM/SAMPLE LOCATION MAP
ACTIVITY CENTER/GYMNASIUM
2801 FOREST RIDGE DRIVE
BEDFORD, TEXAS

Figure 2

I:\34000s\34405\003\CADD\GYMNASIUM.dgn

AGENDA

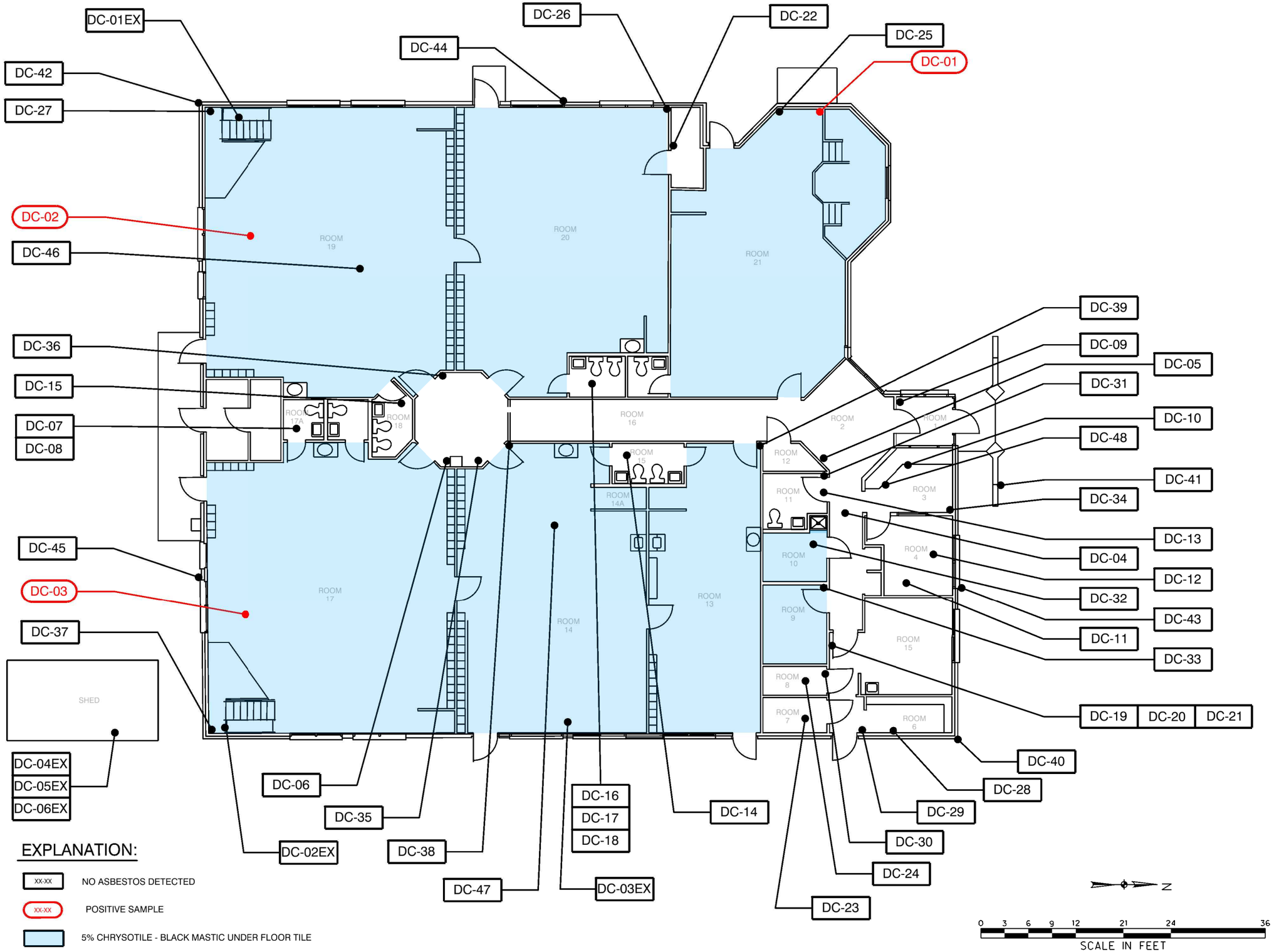

HALFF®
1201 NORTH BOWSER ROAD
RICHARDSON, TEXAS 75081-2275
TEL (214) 346-6200
FAX (214) 739-0095

ACM/SAMPLE LOCATION MAP
DAY CARE CENTER
1308 HARWOOD RD.
BEDFORD, TEXAS

Project No.:	34405.003
Issued:	4/2020
Drawn By:	AGH
Checked By:	M.T.

Sheet Title

ACM/SAMPLE LOCATION MAP
DAY CARE CENTER
1308 HARWOOD RD.
BEDFORD, TEXAS

Figure 2

I:\34000s\34405\003\CADD\day care center-base.dgn

AGENDA

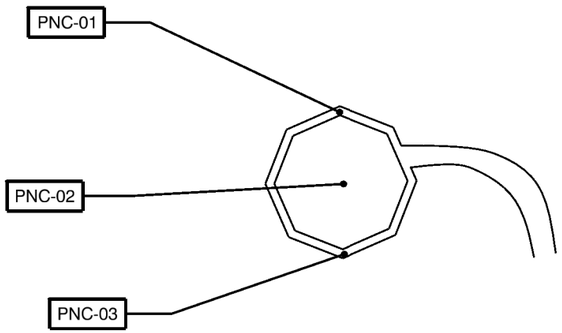

PAVILION NORTH OF CONCESSION STAND

NOT TO SCALE

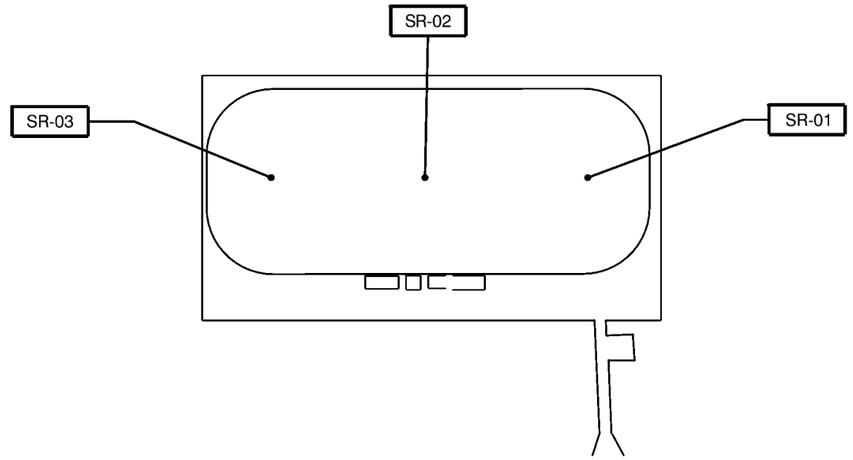

SKATE RINK

NOT TO SCALE

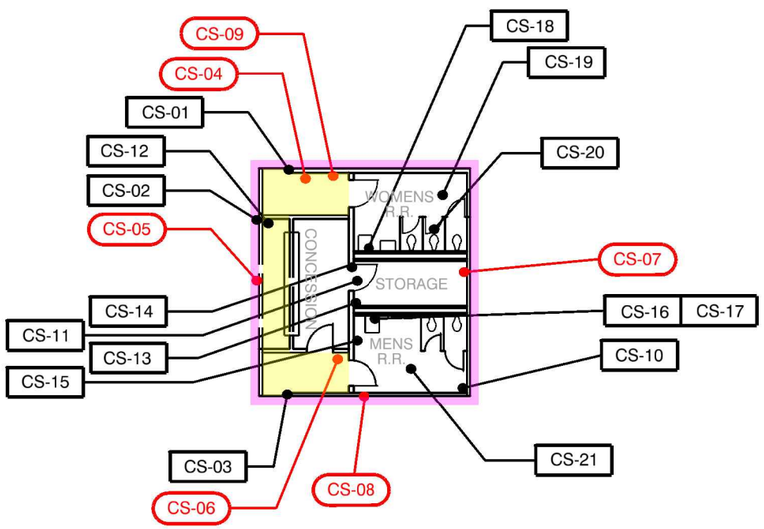

CONCESSION STAND

SCALE: 1" - 20'

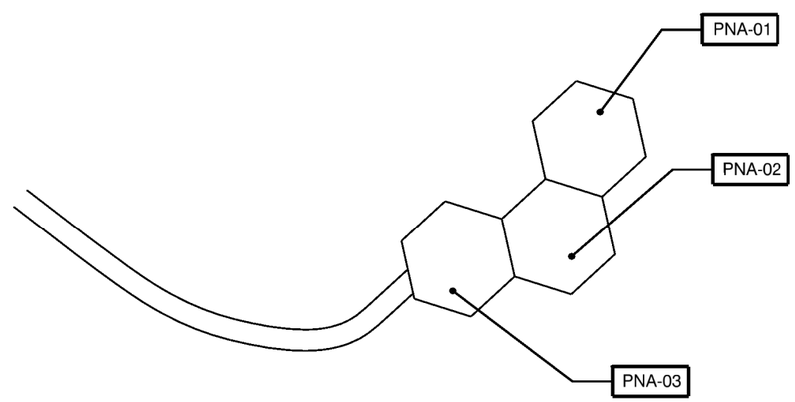

PAVILION NORTH OF ARTS BUILDING

NOT TO SCALE

EXPLANATION:

XX-XX	NO ASBESTOS DETECTED
XX-XX	ASBESTOS CONTAINING MATERIAL
	20% CHRYSOTILE - CEMENT BOARD CEILING
	5% CHRYSOTILE - ROOFING MASTIC ON PARAPET WALL

HALFF®
1201 NORTH BOWSER ROAD
RICHARDSON, TEXAS 75081-2275
TEL (214) 346-6200
FAX (214) 739-0095

ACM/SAMPLE LOCATION MAP
BEDFORD BOYS RANCH PARK
FOREST RIDGE DRIVE
BEDFORD, TEXAS

Project No.:	34405.003
Issued:	4/2020
Drawn By:	AGH
Checked By:	M.T.
Sheet Title	ACM/SAMPLE LOCATION MAP BEDFORD BOYS RANCH PARK FOREST RIDGE DRIVE BEDFORD, TEXAS
Figure	2

I:\34000s\34405\003\CADD\SPLASH PARK-ADDITIONAL AREAS.dgn

AGENDA

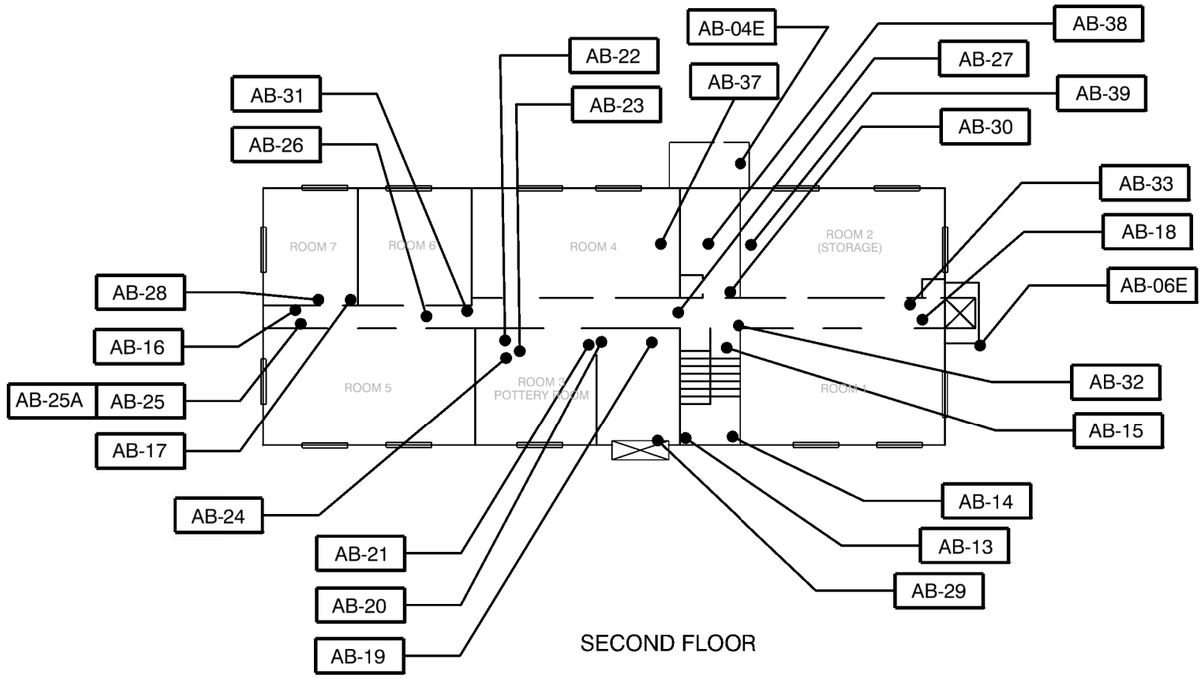

SECOND FLOOR

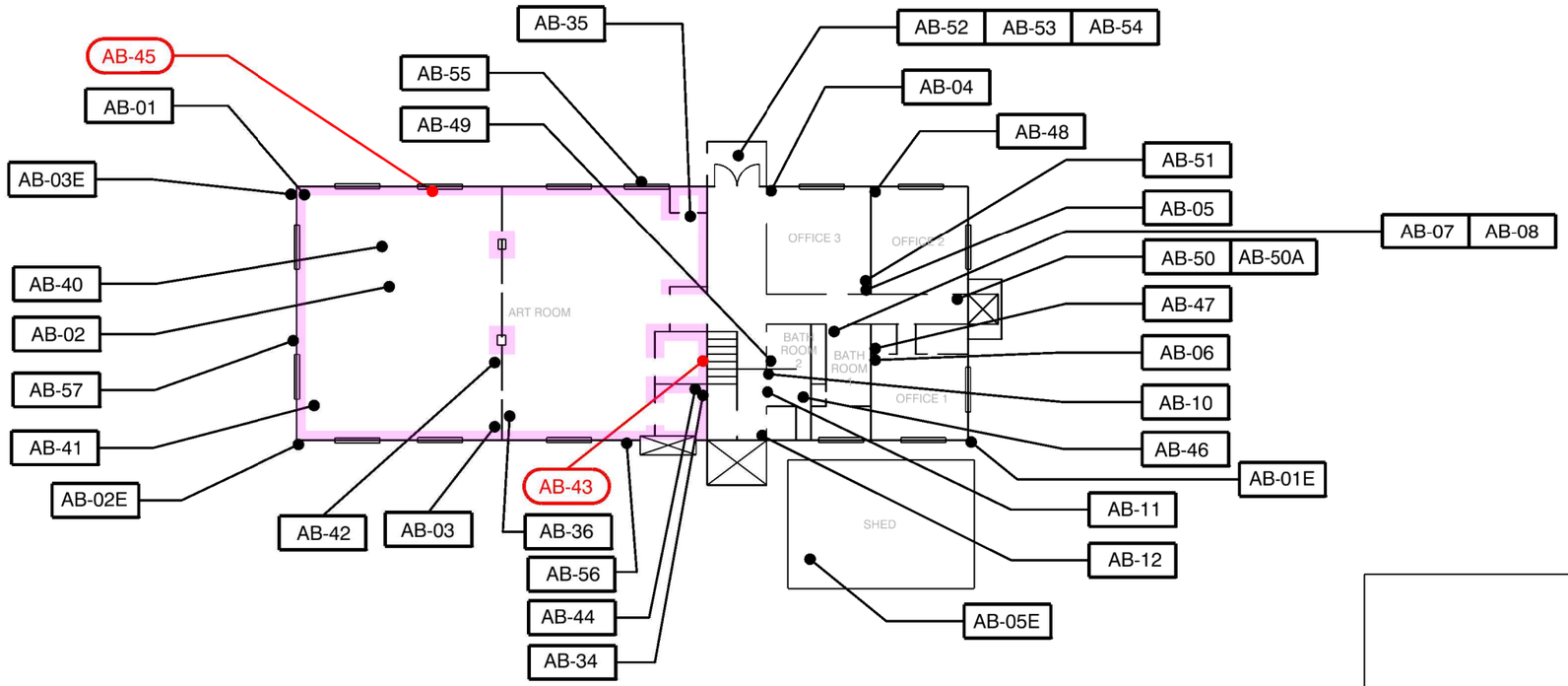

FIRST FLOOR

EXPLANATION:

XX-XX	NO ASBESTOS DETECTED
XX-XX	POSITIVE SAMPLE
	2-3% CHRYSOTILE - PAINT TEXTURE AND JOINT COMPOUND

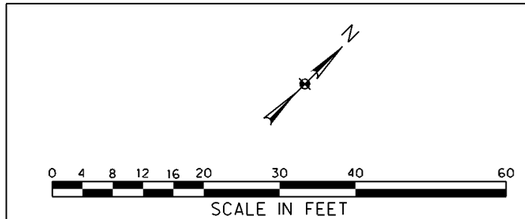

HALFF®
1201 NORTH BOWSER ROAD
RICHARDSON, TEXAS 75081-2275
TEL (214) 346-6200
FAX (214) 739-0095

ACM/SAMPLE LOCATION MAP
ARTS BUILDING
2819 R.D. HURT PARKWAY

Project No.:	34405.003
Issued:	2/2020
Drawn By:	AGH
Checked By:	M.T.

Sheet Title

ACM/SAMPLE LOCATION MAP
ARTS BUILDING
2819 R.D. HURT PARKWAY

Figure 2

I:\34000s\34405\003\CADD\ARTS BUILDING.dgn

AGENDA

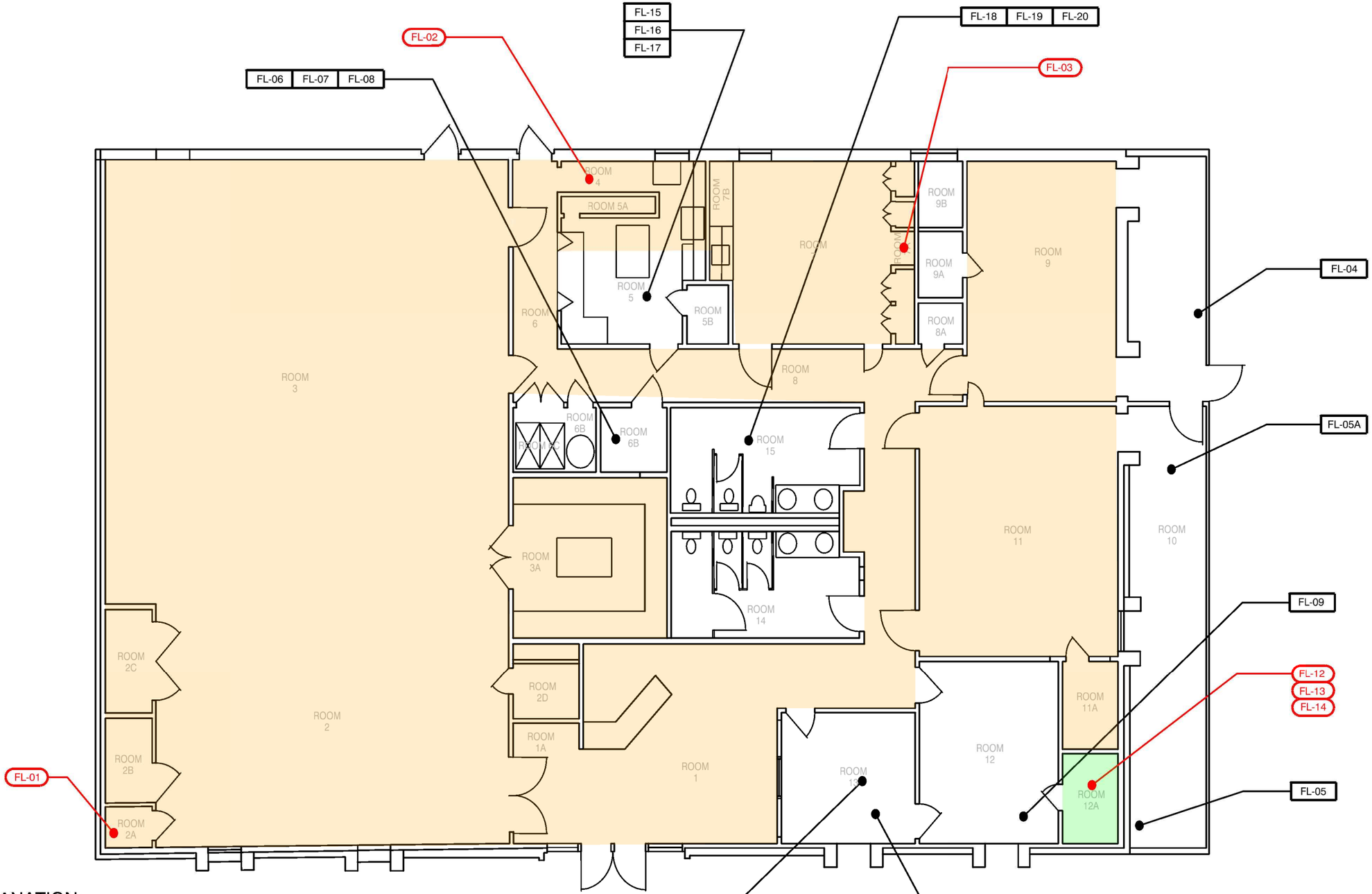

EXPLANATION:

- XX-XX — NO ASBESTOS DETECTED
- XX-XX — POSITIVE SAMPLE
- 65% CHRYSOTILE, SHEET FLOORING (UNDER FLOOR TILE)
- 65% CHRYSOTILE, SHEET FLOORING

0 2 4 6 8 10 15 20 30
WCALE IN FEET

HALFF®
1201 NORTH BOWSER ROAD
RICHARDSON, TEXAS 75081-2275
TEL (214) 346-6200
FAX (214) 739-0095

ACM/SAMPLE LOCATION MAP
BEDFORD SENIOR CENTER
FLOORS
2817 R.D. HURT PARKWAY
BEDFORD, TEXAS

Project No.:	34405.003
Issued:	3/2020
Drawn By:	AGH
Checked By:	M.T.

Sheet Title
ACM/SAMPLE LOCATION MAP
BEDFORD SENIOR CENTER
FLOORS
2817 R.D. HURT PARKWAY
BEDFORD, TEXAS

Figure 2

I:\34000s\34405\003\CADD\SENIOR CENTER-FLOORS.dgn

TIPS VENDOR AGREEMENT

Between CUSTARD CONSTRUCTION SERVICES **and**
(Company Name)

THE INTERLOCAL PURCHASING SYSTEM (TIPS),
a Department of Texas Education Service Center Region 8 for
TIPS RFP 191002 Asbestos and other Hazardous Contaminant Abatement and Disposal Services (PART 1 ONLY)

General Information

The Vendor Agreement ("Agreement") made and entered into by and between The Interlocal Purchasing System (hereinafter referred to as "TIPS" respectfully) a government cooperative purchasing program authorized by the Region 8 Education Service Center, having its principal place of business at 4845 US Hwy 271 North, Pittsburg, Texas 75686. This Agreement consists of the provisions set forth below, including provisions of all Attachments referenced herein. In the event of a conflict between the provisions set forth below and those contained in any Attachment, the provisions set forth shall control unless otherwise agreed by the parties in writing and by signature and date on the attachment.

A Purchase Order, Agreement or Contract is the TIPS Member's approval providing the authority to proceed with the negotiated delivery order under the Agreement. Special terms and conditions as agreed between the Vendor and TIPS Member should be added as addendums to the Purchase Order, Agreement or Contract. Items such as certificate of insurance, bonding requirements, small or disadvantaged business goals are some, but not all, of the addendums possible.

Terms and Conditions

Freight

All quotes to members shall provide a line item for cost for freight or shipping regardless if there is a charge or not. If no charge for freight or shipping, indicate by stating "No Charge" or "$0", "included in price" or other similar indication. Otherwise, all shipping, freight or delivery changes shall be passed through to the TIPS Member at cost with no markup and said charges shall be agreed by the TIPS Member unless alternative shipping terms are agreed by TIPS as a result of the proposal award.

Warranty Conditions

All new supplies equipment and services shall include ***manufacturer's minimum standard warranty*** unless otherwise agreed to in writing. Vendor shall be legally permitted to sell all products offered for sale to TIPS Members if the offering is included in the Request for Proposal category. All goods proposed and sold shall be new unless clearly stated in writing.

Customer Support

The Vendor shall provide timely and accurate customer support for orders to TIPS Members as agreed by the Parties. Vendors shall respond to such requests within a commercially reasonable time after receipt of the request. If support and/or training is a line item sold or packaged with a sale, support shall be as agreed with the TIPS Member.

Agreements

Agreements for purchase will normally be put into effect by means of a purchase order(s) executed by

authorized agents of the TIPS Member participating government entities, but other means of placing an order may be used at the Member's discretion.

Tax exempt status

Most TIPS Members are tax exempt and the related laws and/or regulations of the controlling jurisdiction(s) of the TIPS Member shall apply.

Assignments of Agreements

No assignment of this Agreement may be made without the prior notification of TIPS. Written approval of TIPS shall not be unreasonably withheld. Payment for delivered goods and services can only be made to the awarded Vendor, Vendor designated reseller or vendor assigned company.

Disclosures

- Vendor and TIPS affirms that he/she or any authorized employees or agents has not given, offered to give, nor intends to give at any time hereafter any economic opportunity, future employment, gift, loan, gratuity, special discount, trip, favor or service to a public servant in connection with this Agreement.
- Vendor shall attach, in writing, a complete description of any and all relationships that might be considered a conflict of interest in doing business with the TIPS program.
- The Vendor affirms that, to the best of his/her knowledge, the offer has been arrived at independently, and is submitted without collusion with anyone to obtain information or gain any favoritism that would in any way limit competition or give an unfair advantage over other vendors in the award of this Agreement.

Term and Renewal of Agreements

The Agreement with TIPS is for three (3) years with an option for renewal for an additional one (1) consecutive year if both parties agree. TIPS may or may not exercise the one-year extension beyond the base three-year term and whether or not to offer the extension is at the sole discretion of TIPS. The scheduled Agreement termination date shall be the last date of the
month of the last month of the agreement's legal effect. **Example:** *If the agreement is scheduled to end on May 23, the anniversary date of the award, it would actually be extended to May 31 in the last month of the last year the contract is active.*

Automatic Renewal Clauses Incorporated in Awarded Vendor Agreements with TIPS Members Resulting from the Solicitation and with the Vendor Named in this Agreement.

No Agreement for goods or services with a TIPS Member by the awarded vendor named in this Agreement that results from the solicitation award named in this Agreement, may incorporate an automatic renewal clause that exceeds month to month terms with which the TIPS Member must comply. All renewal terms incorporated in an Agreement by the vendor with the TIPS Member shall only be valid and enforceable when the vendor receives written confirmation by purchase order, executed Agreement or other written instruction issued by the TIPS Member for any renewal period. The purpose of this clause is to avoid a TIPS Member inadvertently renewing an Agreement during a period in which the governing body of the TIPS Member has not properly appropriated and budgeted the funds to satisfy the Agreement renewal. This term is not negotiable and any Agreement between a TIPS Member and a TIPS awarded vendor with an automatic renewal clause that conflicts with these terms is rendered void and unenforceable.

Shipments

The Vendor shall ship, deliver or provide ordered products or services within a commercially reasonable time after the receipt of the order from the TIPS Member. If a delay in said delivery is anticipated, the Vendor shall notify TIPS Member as to why delivery is delayed and shall provide an estimated time for

completion of the order. TIPS or the requesting entity may cancel the order if estimated delivery time is not acceptable or not as agreed by the parties.

Invoices

Each invoice or pay request shall include the TIPS Member's purchase order number or other identifying designation as provided in the order by the TIPS Member. If applicable, the shipment tracking number or pertinent information for verification of TIPS Member receipt shall be made available upon request.

Payments

The TIPS Member will make payments directly to the Vendor, the vendor assigned dealer or as agreed by the Vendor and the TIPS Member after receiving invoice and in compliance with applicable payment statute(s), whichever is the greater time or as otherwise provided by an agreement of the parties.

Pricing

Price increases will be honored according to the terms of the solicitation. All pricing submitted to TIPS shall include the participation fee, as provided in the solicitation, to be remitted to TIPS by the Vendor. Vendor will not show adding the fee to the invoice presented to TIPS Member customer.

Participation Fees

The Participation Fee that was published as part of the Solicitation and the fee published is the legally effective fee, along with any fee conditions stated in the RFP. Collection of the fees by TIPS is required under Texas Government Code §791.011 Et seq. Vendor or vendor assigned dealer agrees to pay the participation fee for all Agreement sales to TIPS on a monthly scheduled report or as otherwise agreed by the parties. To report sales, login to the TIPS Vendor Portal and click on the PO's and Payments tab. Pages 3-7 of the Vendor Portal User Guide will walk you through the process of reporting sales to TIPS. Please refer to the TIPS Accounting FAQ's for more information about reporting sales and if you have further questions, contact the Accounting Team at accounting@tips-usa.com. The Vendor or vendor assigned dealers are responsible for keeping record of all sales that go through the TIPS Agreement and submitting same to TIPS. Failure to render the participation fee to TIPS shall constitute a breach of this agreement with our parent governmental entity, Texas Education Service Center Region 8, as established by the Texas legislature and shall be grounds for termination of this agreement and any other agreement held with TIPS and possible legal action. TIPS reserves all rights under the law to collect the fees due. Please contact TIPS at tips@tips-usa.com or call (866) 839-8477 if you have questions about paying fees.

Indemnity

The Vendor agrees to indemnify and hold harmless and defend TIPS, TIPS Member(s), officers and employees from and against all claims and suits by third parties for damages, injuries to persons (including death), property damages, losses, and expenses including court costs and reasonable attorney's fees, arising out of, or resulting from, Vendor's performance under this Agreement, including all such causes of action based upon common, constitutional, or statutory law, or based in whole or in part, upon allegations of negligent or intentional acts on the part of the Vendor, its officers, employees, agents, subcontractors, licensees, or invitees. Parties found liable shall pay their proportionate share of damages as agreed by the parties or as ordered by a court of competent jurisdiction over the case. **NO LIMITATION OF LIABILITY FOR DAMAGES FOR PERSONAL INJURY OR PROPERTY DAMAGE ARE PERMITTED OR AGREED BY TIPS/ESC REGION 8.** Per Texas Education Code §44.032(f), and pursuant to its requirements only, reasonable Attorney's fees are recoverable by the prevailing party in any dispute resulting in litigation.

State of Texas Franchise Tax

By signature hereon, the bidder hereby certifies that he/she is not currently delinquent in the payment of any franchise taxes owed the State of Texas under Chapter 171, Tax Code.

Miscellaneous

The Vendor acknowledges and agrees that continued participation in TIPS is subject to TIPS sole discretion and that any Vendor may be removed from the participation in the Program at any time with or without cause. Nothing in the Agreement or in any other communication between TIPS and the Vendor may be construed as a guarantee that TIPS or TIPS Members will submit any orders at any time. TIPS reserves the right to request additional proposals for items or services already on Agreement at any time.

Purchase Order Pricing/Product Deviation

If a deviation of pricing/product on a purchase order or contract modification occurs between the Vendor and the TIPS Member, TIPS must be notified within five (5) business days of receipt of change order.

Termination for Convenience of TIPS Agreement Only

TIPS reserves the right to terminate this agreement for cause or no cause for convenience with a thirty (30) days prior written notice. Termination for convenience is conditionally required under Federal Regulations 2 CFR part 200 if the customer is using federal funds for the procurement. All purchase orders presented to the Vendor, but not fulfilled by the Vendor, by a TIPS Member prior to the actual termination of this agreement shall be honored at the option of the TIPS Member. The awarded vendor may terminate the agreement with ninety (90) days prior written notice to TIPS 4845 US Hwy North, Pittsburg, Texas 75686. The vendor will be paid for goods and services delivered prior to the termination provided that the goods and services were delivered in accordance with the terms and conditions of the terminated agreement. This termination clause does not affect the sales agreements executed by the Vendor and the TIPS Member customer pursuant to this agreement. TIPs Members may negotiate a termination for convenience clause that meets the needs of the transaction based on applicable factors, such as funding sources or other needs.

TIPS Member Purchasing Procedures

Usually, purchase orders or their equal are issued by participating TIPS Member to the awarded vendor and should indicate on the order that the purchase is per the applicable TIPS Agreement number. Orders are typically emailed to TIPS at tipspo@tips-usa.com.

- Awarded vendor delivers goods/services directly to the participating member.
- Awarded vendor invoices the participating TIPS Member directly.
- Awarded vendor receives payment directly from the participating member.
- Awarded vendor reports sales monthly to TIPS (unless prior arrangements have been made with TIPS for an alternative submission schedule).

Licenses

Awarded vendor shall maintain, in current status, all federal, state and local licenses, bonds and permits required for the operation of the business conducted by awarded vendor. Awarded vendor shall remain reasonably fully informed of and in compliance with all ordinances and regulations pertaining to the lawful

provision of goods or services under the Agreement. TIPS and TIPS Members reserves the right to stop work and/or cancel an order or terminate this or any other sales Agreement of any awarded vendor whose license(s) required for performance under this Agreement have expired, lapsed, are suspended or terminated subject to a 30-day cure period unless prohibited by applicable statue or regulation.

Novation

If awarded vendor sells or transfers all assets, rights or the entire portion of the assets or rights required to perform this Agreement, a successor in interest must guarantee to perform all obligations under this Agreement. A simple change of name agreement will not change the Agreement obligations of awarded vendor. TIPS will consider Contract Assignments on a case by case basis. TIPS must be notified within

five (5) business days of the transfer of assets or rights.

Site Requirements (only when applicable to service or job)

Cleanup: When performing work on site at a TIPS Member's property, awarded vendor shall clean up and remove all debris and rubbish resulting from their work as required or directed by TIPS Member or as agreed by the parties. Upon completion of work, the premises shall be left in good repair and an orderly, neat, clean and unobstructed condition.
Preparation: Awarded vendor shall not begin a project for which TIPS Member has not prepared the site, unless awarded vendor does the preparation work at no cost, or until TIPS Member includes the cost of site preparation in a purchase order.
Site preparation includes, but is not limited to: moving furniture, installing wiring for networks or power, and similar pre-installation requirements.
Registered sex offender restrictions: For work to be performed at schools, awarded vendor agrees that no employee of a sub-contractor who has been adjudicated to be a registered sex offender will perform work at any time when students are, or reasonably expected to be, present unless otherwise agreed by the TIPS Member. Awarded vendor agrees that a violation of this condition shall be considered a material breach and may result in the cancellation of the purchase order at the TIPS Member's discretion.
Awarded vendor must identify any additional costs associated with compliance of this term. If no costs are specified, compliance with this term will be provided at no additional charge. **Safety measures:** Awarded vendor shall take all reasonable precautions for the safety of employees on the worksite, and shall erect and properly maintain all necessary safeguards for protection of workers and the public. Awarded vendor shall post warning signs against all hazards created by the operation and work in progress. Proper precautions shall be taken pursuant to state law and standard practices to protect workers, general public and existing structures from injury or damage.

Smoking

Persons working under Agreement shall adhere to the TIPS Member's or local smoking statutes, codes or policies.

Marketing

Awarded vendor agrees to allow TIPS to use their name and logo within TIPS website, marketing materials and advertisement subject to any reasonable restrictions provided to TIPS in the Proposal to the Solicitation. The Vendor may submit an acceptable use directive for Vendor's names and logos with which TIPS agrees to comply. Any use of TIPS name and logo or any form of publicity, inclusive of press release, regarding this Agreement by awarded vendor must have prior approval from TIPS which will not be unreasonably withheld. Request may be made by email to TIPS@TIPS-USA.COM

Supplemental Agreements

The TIPS Member entity participating in the TIPS Agreement and awarded vendor may enter into a separate Supplemental Agreement or contract to further define the level of service requirements over and above the minimum defined in this Agreement such as but not limited to, invoice requirements, ordering requirements, specialized delivery, etc. Any Supplemental Agreement or contract developed as a result of this Agreement is exclusively between the TIPS Member entity customer and the Vendor. TIPS, its agents, TIPS Members and employees not a party to the Supplemental Agreement with the TIPS Member customer, shall not be made party to any claim for breach of such agreement unless named and agreed by the Party in question in writing in the agreement. If a Vendor submitting a Proposal requires TIPS and/or TIPS Member to sign an additional agreement, those agreements shall comply with the award made by TIPS to the Vendor. Supplemental Vendor's Agreement documents may not become part of TIPS's Agreement with vendor unless and until an authorized representative of TIPS reviews and approves it. TIPS review and approval may be at any time during the life of this Vendor Agreement. TIPS permits TIPS Members to negotiate additional terms and

conditions with the Vendor for the provision of goods or services under the Vendor's TIPS Agreement so long as they do not materially conflict with this Agreement.

Survival Clause

All applicable sales, leases, Supplemental Agreements, contracts, software license agreements, warranties or service agreements that were entered into between Vendor and TIPS or the TIPS Member Customer under the terms and conditions of this Agreement shall survive the expiration or termination of this Agreement. All Orders, Purchase Orders issued or contracts executed by TIPS or a TIPS Member and accepted by the Vendor prior to the expiration or termination of this agreement, shall survive expiration or termination of the Agreement, subject to previously agreed terms and conditions agreed by the parties or as otherwise specified herein relating to termination of this agreement.

Legal obligations

It is the responding Vendor's responsibility to be aware of and comply with all local, state and federal laws governing the sale of products/services identified in the applicable Solicitation that resulted in this Vendor Agreement and any awarded Agreement thereof. Applicable laws and regulations must be followed even if not specifically identified herein.

Audit rights

Due to transparency statutes and public accountability requirements of TIPS and TIPS Members', the awarded Vendor shall, at their sole expense, maintain appropriate due diligence of all purchases made by TIPS Member that utilizes this Agreement. TIPS and Region 8 ESC each reserve the right to audit the accounting of TIPS related purchases for a period of three (3) years from the time such purchases are made. This audit right shall survive termination of this Agreement for a period of one (1) year from the effective date of termination. In order to ensure and confirm compliance with this agreement, TIPS shall have authority to conduct audits of Awarded Vendor's pricing or TIPS transaction documentation with TIPS Members with 30 days' notice unless the audit is ordered by a Court Order or by a Government Agency with authority to do so without notice. Notwithstanding the foregoing, in the event that TIPS is made aware of any pricing being offered to eligible entities that is materially inconsistent with the pricing under this agreement, TIPS shall have the ability to conduct the audit internally or may engage a third- party auditing firm to investigate any possible non-compliant conduct or may terminate the Agreement according to the terms of this Agreement. In the event of an audit, the requested materials shall be reasonably provided in the time, format and at the location acceptable to Region 8 ESC or TIPS. TIPS agrees not to perform a random audit the TIPS transaction documentation more than once per calendar year, but reserves the right to audit for just cause or as required by any governmental agency or court with regulatory authority over TIPS or the TIPS Member.

Force Majeure

If by reason of Force Majeure, either party hereto shall be rendered unable wholly or in part to carry out its obligations under this Agreement then such party shall give notice and full particulars of Force Majeure in writing to the other party within a reasonable time after occurrence of the event or cause relied upon, and the obligation of the party giving such notice, so far as it is affected by such Force Majeure, shall be suspended during the continuance of the inability then claimed, except as hereinafter provided, but for no longer period, and such party shall endeavor to remove or overcome such inability with all reasonable dispatch.

Choice of Law

The Agreement between the Vendor and TIPS/ESC Region 8 and any addenda or other additions resulting from this procurement process, however described, shall be governed by, construed and enforced in accordance with the laws of the State of Texas, regardless of any conflict of laws principles.

Venue, Jurisdiction and Service of Process

Any Proceeding arising out of or relating to this procurement process or any contract issued by TIPS resulting from or any contemplated transaction shall be brought in a court of competent jurisdiction in Camp County, Texas and each of the parties irrevocably submits to the exclusive jurisdiction of said court in any such proceeding, waives any objection it may now or hereafter have to venue or to convenience of forum, agrees that all claims in respect of the Proceeding shall be heard and determined only in any such court, and agrees not to bring any proceeding arising out of or relating to this procurement process or any contract resulting from or any contemplated transaction in any other court. The parties agree that either or both of them may file a copy of this paragraph with any court as written evidence of the knowing, voluntary and freely bargained for agreement between the parties irrevocably to waive any objections to venue or to convenience of forum. Process in any Proceeding referred to in the first sentence of this Section may be served on any party anywhere in the world.

Venue for any dispute resolution process, other than litigation, between TIPS and the Vendor shall be located in Camp or Titus County, Texas.

Project Delivery Order Procedures

The TIPS Member having approved and signed an interlocal agreement, or other TIPS Membership document, may make a request of the awarded vendor under this Agreement when the TIPS Member desires goods or services awarded to the Vendor. Notification may occur via phone, the web, courier, email, fax, or in person. Upon notification of a pending request, the awarded vendor shall acknowledge the TIPS Member's request as soon as possible, but must make contact with the TIPS Member within two working days.

Status of TIPS Members as Related to This Agreement

TIPS Members stand in the place of TIPS as related to this agreement and have the same access to the proposal information and all related documents. TIPS Members have all the same rights under the awarded Agreement as TIPS.

Vendor's Resellers as Related to This Agreement

Vendor's Named Resellers under this Agreement shall comply with all terms and conditions of this agreement and all addenda or incorporated documents. All actions related to sales by Authorized Vendor's Resellers under this Agreement are the responsibility of the Awarded Vendor. If Resellers fail to report sales to TIPS under your Agreement, the awarded Vendor is responsible for their contractual failures and shall be billed for the fees. The awarded vendor may then recover the fees from their named reseller.

Support Requirements

If there is a dispute between the awarded vendor and TIPS Member, TIPS or its representatives will assist in conflict resolution or third party if requested by either party. TIPS, or its representatives, reserves the right to inspect any project and audit the awarded Vendor's TIPS project files, documentation and correspondence related to the requesting TIPS Member's order. If there are confidentiality requirements by either party, TIPS shall comply to the extent permitted by law.

Incorporation of Solicitation

The TIPS Solicitation which resulted in this Vendor Agreement, whether a Request for Proposals, the Request for Competitive Sealed Proposals or Request for Qualifications solicitation, or other, the Vendor's response to same and all associated documents and forms made part of the solicitation process, including any addenda, are hereby incorporated by reference into this Agreement as if copied verbatim.

SECTION HEADERS OR TITLES

THE SECTON HEADERS OR TITLES WITHIN THIS DOCUMENT ARE MERELY GUIDES FOR CONVENIENCE AND ARE NOT FOR CLASSIFICATION OR LIMITING OF THE RESPONSIBILITES OF THE PARTIES TO THIS DOCUMENT.

STATUTORY REQUIREMENTS

Texas governmental entities are prohibited from doing business with companies that fail to certify to this condition as required by Texas Government Code Sec. 2270.

By executing this agreement, you certify that you are authorized to bind the undersigned Vendor and that your company (1) does not boycott Israel; and (2) will not boycott Israel during the term of the Agreement.

You certify that your company is not listed on and does not and will not do business with companies that are on the Texas Comptroller of Public Accounts list of Designated Foreign Terrorists Organizations per Texas Gov't Code 2270.0153 found at https://comptroller.texas.gov/purchasing/docs/foreign-terrorist.pdf

You certify that if the certified statements above become untrue at any time during the life of this Agreement that the Vendor will notify TIPS within three (3) business day of the change by a letter on Vendor's letterhead from and signed by an authorized representative of the Vendor stating the non-compliance decision and the TIPS Agreement number and description at:

Attention: General Counsel
ESC Region 8/The Interlocal Purchasing System (TIPS)
4845 Highway 271 North
Pittsburg, TX,75686
And by an email sent to bids@tips-usa.com

Insurance Requirements

The undersigned Vendor agrees to maintain the below minimum insurance requirements for TIPS Contract Holders.

General Liability	$1,000,000 each Occurrence/ Aggregate **Automobile**
Liability	$300,000 Includes owned, hired & non-owned
Workers' Compensation	Statutory limits for the jurisdiction in which the Vendor performs under this Agreement.
Umbrella Liability	$1,000,000

When the contractor or its subcontractors are liable for any damages or claims, the contractors' policy, when the Vendor is responsible for the claim, must be primary over any other valid and collectible insurance carried by the District. Any immunity available to TIPS or TIPS Members shall not be used as a defense by the contractor's insurance policy. The coverages and limits are to be considered minimum requirements and in no way limit the liability of the Contractor(s). Insurance shall be written by a carrier with an A-; VII or better rating in accordance with current A.M. Best Key Rating Guide. Only deductibles applicable to property damage are acceptable, unless proof of retention funds to cover said deductibles is provided. "Claims made" policies will not be accepted. Vendor's required minimum coverage shall not be suspended, voided, cancelled, non-renewed or reduced in coverage or in limits unless replaced by a policy that provides the minimum required coverage except after thirty (30) days prior written notice by certified mail, return receipt requested has been given to TIPS or the TIPS Member if a project or pending delivery of an order is ongoing. Upon request, certified copies of all insurance policies shall be furnished to the TIPS or the TIPS Member.

Special Terms and Conditions

- **Orders:** All vendor orders received from TIPS Members must be emailed to TIPS at tipspo@tips-usa.com. Should a TIPS Member send an order directly to the Vendor, it is the Vendor's responsibility to forward a copy of the order to TIPS at the email above within 3 business days and confirm its receipt with TIPS.
- **Vendor Encouraging Members to bypass TIPS agreement:** Encouraging TIPS Members to purchase directly from the Vendor or through another agreement, when the Member has requested using the TIPS cooperative Agreement or price, and thereby bypassing the TIPS Agreement is a violation of the terms and conditions of this Agreement and will result in removal of the Vendor from the TIPS Program.
- **Order Confirmation**: All TIPS Member Agreement orders are approved daily by TIPS and sent to vendor. The Vendor should confirm receipt of orders to the TIPS Member (customer) within 3 business days.
- **Vendor custom website for TIPS**: If Vendor is hosting a custom TIPS website, updated pricing when effective. TIPS shall be notified when prices change in accordance with the award.
- **Back Ordered Products**: If product is not expected to ship within the time provided to the TIPS member by the Vendor, customer is to be notified within 3 business days and appropriate action taken based on customer request.

The TIPS Vendor Agreement Signature Page is inserted here.

TIPS Vendor Agreement Signature Form

TIPS RFP 191002 Asbestos and other Hazardous Contaminant Abatement and Disposal Services (Part 1 only)

Company Name Custard Construction Services

Address 505 Eagle Cove Circle

City Tioga State TX Zip 76271

Phone 214-415-2383 Fax

Email of Authorized Representative chris@ccsvcs.com

Name of Authorized Representative Chris Custard

Title Vice President / Project Manager

Signature of Authorized Representative

Date 12/19/2019

TIPS Authorized Representative Name Meredith Barton

Title Chief Operating Officer

TIPS Authorized Representative Signature Meredith Barton

Approved by ESC Region 8 David Wayne Fitts

Date 1/24/2020

AGENDA

191002
Custard Construction Services
Supplier Response

Event Information

Number: 191002
Title: Asbestos and other Hazardous Contaminant Abatement and Disposal Services (2 Part with JOC)
Type: Request for Proposal
Issue Date: 10/3/2019
Deadline: 12/20/2019 03:00 PM (CT)
Notes: This is a two part solicitation. Part 1 is for Asbestos and other Hazard ous Contaminant Abatement and Disposal Services not considered a public work/construction non construction services and Part 2 is for the construction related work or installations.

Contact Information

Contact: Kristie Collins, Contracts Compliance Specialist
Address: Region 8 Education Service Center
4845 US Highway 271 North
Pittsburg, TX 75686
Phone: +1 (866) 839-8477
Fax: +1 (866) 839-8472
Email: bids@tips-usa.com

Custard Construction Services Information

Address: 609 Houston St.
Arlington, TX 76011
Phone: (214) 535-5002

By submitting your response, you certify that you are authorized to represent and bind your company.

Chris Custard
Signature

chris@ccsvcs.com
Email

Submitted at 12/20/2019 1:57:58 PM

Requested Attachments

Vendor Agreement part 1

Tips Agreement 1.pdf

The vendor must download the Vendor Agreement from the attachment tab, fill in the requested information and uploa d the completed agreement.
DO NOT UPLOAD encrypted or password protected files.

Agreement Signature Form part 1

Tips Signature 19.pdf

If you have not taken exception or deviation to the agreement language in the solicitation attributes, download the AG REEMENT SIGNATURE FORM from the "ATTACHMENTS" tab. This PDF document is a fillable form. Download the doc ument to your computer, fill in the requested company information, print the file, SIGN the form, SCAN the completed a nd signed AGREEMENT SIGNATURE FORM, and upload here.

If you have taken exception to any of the agreement language and noted the exception in the deviations section of the attributes for the agreement, complete the AGREEMENT SIGNATURE FORM, but DO NOT SIGN until those deviations have been negotiated and resolved with TIPS management. Upload the unsigned form here, because this is a require d document.

Vendor Agreement Part 2

No response

If proposing on Part 2, the vendor must download the Vendor Agreement from the attachment tab, fill in the requested information and upload the completed agreement.
DO NOT UPLOAD encrypted or password protected files.

Agreement Signature Form Part 2

No response

If proposing on Part 2, the vendor must download the Vendor Agreement from the attachment tab, fill in the requested information and upload the completed agreement.
DO NOT UPLOAD encrypted or password protected files.

Part 1 Pricing Spreadsheet #1

191002_PART_1-Pricing_form_1 (2).xlsx

The vendor must download the PRICING SPREADSHEET SHEET from the attachment tab, fill in the requested informa tion and upload the completed spreadsheet.
DO NOT UPLOAD encrypted or password protected files.

Part 1 Pricing Spreadsheet #2

191002_PART_1-Pricing_form_2.xlsx

The vendor must download the PRICING SPREADSHEET SHEET from the attachment tab, fill in the requested informa tion and upload the completed spreadsheet.
DO NOT UPLOAD encrypted or password protected files.

Part 2 Pricing Sheet JOC

Tips Pricing 19.pdf

If the Vendor is proposing Part 2, the vendor must download the "PART 2 RS Means JOC PRICING_FORM" from the at tachment tab, fill in the requested information and upload the completed agreement. DO NOT FAIL TO COMPLETE AL L SECTIONS AND BLANKS IN THE FORM OR IT COULD RENDER YOUR RESPONSE INVALID. If not proposing on Par t 2, mark form NO BID and attach.
DO NOT UPLOAD encrypted or password protected files.

References

Reference_Form_-_JOC_Part_2019.xls

Valid Reference Email addresses are REQUIRED on the spreadsheet. The vendor must download the References spreadsheet from the attachment tab, fill in the requested information and upload the completed spreadsheet. DO NOT UPLOAD encrypted or password protected files.

Proposed Goods and Services

CUSTARD CONSTRUCTION SERVICE2.docx

Please upload one or more documents or sheets describing your offerings, line cards, catalogs, links to offerings OR list links to your offerings that illustrate the catalog of proposed lines of goods and or services you carry and offer under this proposal. I does not have to be exhaustive but should, at a minimum tell us what you are offering. It could be as simple as a sheet with your link to your online catalog of goods and services.

Resellers/Dealers - COMPLETE AND UPLOAD ONLY IF YOU HAVE RESELLER OF YOUR GOODS OR SERVICES PROPOSED

No response

OPTIONAL - complete and upload ONLY IF YOU HAVE RESELLERS of your products, complete and upload this form. This resellers document is for proposers to list any other companies that resell their products. Only list resellers of your products that are located in the US or Canada. Example: If a furniture manufacturer were responding to our RFP, then the furniture manufacturer would list on the resellers list sheet the furniture dealers that carry their products.

HUB Subcontracting Plan Form OPTIONAL

No response

Completion of the HUB Subcontracting Plan Form is OPTIONAL. THE FORM INFORMATION HAS NO EFFECT ON YOUR EVALUATION SCORE. IT IS INFORMATIONAL ONLY. Some Texas State agencies and Universities require it be a part of the file when determining if they can use a TIPS contract. If you choose to complete one, it is not project specific but the general plan the vendor would use. Complete it as best you can.
Vendor can download the HUB Subcontracting Plan Form from the "Attachments" tab and upload their HUB Subcontracting Plan Form.

D/M/WBE Certification OPTIONAL

No response

D/M/WBE Certification documentation may be scanned and uploaded if you desire to claim your status as one of the identified enterprises. (Disadvantaged Business Enterprise, Minority Business Enterprise and/or Woman Business Enterprise) If vendor has more than one certification scan into one document. (PDF Format ONLY)
DO NOT UPLOAD encrypted or password protected files.

HUB Certification OPTIONAL

HUB certificate 2018.pdf

HUB Certification documentation may be scanned and uploaded if you desire to document you status as a HUB company. (Historically Underutilized Business) (PDF Format ONLY)
DO NOT UPLOAD encrypted or password protected files.

Warranty

No response

Warranty information (if applicable) must be scanned and uploaded. (PDF Format ONLY)
DO NOT UPLOAD encrypted or password protected files.

Supplementary

No response

Supplementary information can be scanned and uploaded. (Company information, brochures, catalogs, etc.) (PDF Format ONLY)
DO NOT UPLOAD encrypted or password protected files.

All Other Certificates

No response

All Other Certificates (if applicable) must be scanned and uploaded. If vendor has more than one other certification scan into one document. (PDF Format ONLY)
DO NOT UPLOAD encrypted or password protected files.

Logo and Other Company Marks

No response

Conflict of Interest Form CIQ- ONLY REQUIRED IF A CONFLICT EXISTS PER THE INSTRUCTIONS

No response

ONLY REQUIRED IF A CONFLICT EXISTS PER THE INSTRUCTIONS
Conflict of Interest Form for Vendors that are required to submit the form. The Conflict of Interest Form is included in the Base documents or can be found at https://www.tips-usa.com/assets/documents/docs/CIQ.pdf.

Certificate of Corporate Offerer - COMPLETE ONLY IF OFFERER IS A CORPORATION

Scan_0063.pdf

COMPLETE AND UPLOAD FORM IN ATTACHMENTS SECTION ONLY IF OFFERER IS A CORPORATION

Lobbying Report Standard Form-LLL, “disclosure Form to Report Lobbying,” *No response*

If you answered "I HAVE Lobbied per above" to attribute #66, please download and complete and upload the Standard Form-LLL, “disclosure Form to Report Lobbying,” in the Response attachments section.

Confidentiality Form Scan_0064.pdf

REQUIRED CONFIDENTIALITY FORM. Complete the form according to your company requirements, make any desire d attachments and upload to the appropriate section under "Response Attachments" THIS FORM DETERMINES HOW ESC8/TIPS RESPONDS TO LEGAL PUBLIC INFORMATION REQUESTS.

Bonding Capacity Letter from Surety/Insurance Company Bonding letter 19.pdf

REQUIRED IF YOU ARE PROPOSING ON PART 2 -Attach the Bonding Capacity Letter from Surety/Insurance Compan y. if you do not have one available at time of proposal, attached a letter stating it will be submitted when received to pr ove bonding capacity. No award can be made until official bonding capacity letter is received by TIPS.

Bid Attributes

1	**Yes - No** Disadvantaged/Minority/Women Business Enterprise - D/M/WBE (Required by some participating governmental enti ties) Vendor certifies that their firm is a D/M/WBE? Vendor must upload proof of certification to the ”Response Attac hments” D/M/WBE CERTIFICATES section. No
2	**Yes - No** Historically Underutilized Business - HUB (Required by some participating governmental entities) Vendor certifies that their firm is a HUB as defined by the State of Texas at https://comptroller.texas.gov/purchasing/vendor/hub/ or in a HUBZone as defined by the US Small Business Administration at https://www.sba.gov/offices/headquarters/oh p Proof of one or both may be submitted. Vendor must upload proof of certification to the “Response Attachments” HU B CERTIFICATES section. Yes
3	**Yes - No** The Vendor can provide services and/or products to all 50 US States? No
4	**States Served:** If answer is NO to question #3, please list which states can be served. (Example: AR, OK, TX) Texas, Oklahoma, Louisiana, New Mexico, Colorado
5	**Company and/or Product Description:** This information will appear on the TIPS website in the company profile section, if awarded a TIPS contract. (Limit 7 50 characters.) Custard Construction, general contractor, drywall, paint, asbestos abatement, Hazardous spills, hazardous contain ment, Fence, carpentry, cabinets, flooring, ceilings, flooring
6	**Primary Contact Name** Primary Contact Name Chris Custard

7	**Primary Contact Title** Primary Contact Title Vie President / Superintendent
8	**Primary Contact Email** Primary Contact Email chris@ccsvcs.com
9	**Primary Contact Phone** Enter 10 digit phone number. (No dashes or extensions) Example: 8668398477 2144152383
10	**Primary Contact Fax** Enter 10 digit phone number. (No dashes or extensions) Example: 8668398477 *No response*
11	**Primary Contact Mobile** Enter 10 digit phone number. (No dashes or extensions) Example: 8668398477 2144152383
12	**Secondary Contact Name** Secondary Contact Name Mark Richards
13	**Secondary Contact Title** Secondary Contact Title Project Manager
14	**Secondary Contact Email** Secondary Contact Email mark@ccsvcs.com
15	**Secondary Contact Phone** Enter 10 digit phone number. (No dashes or extensions) Example: 8668398477 2145355002
16	**Secondary Contact Fax** Enter 10 digit phone number. (No dashes or extensions) Example: 8668398477 *No response*

17 Secondary Contact Mobile

Enter 10 digit phone number. (No dashes or extensions)
Example: 8668398477

2145355002

18 Admin Fee Contact Name

Admin Fee Contact Name. This person is responsible for paying the admin fee to TIPS.

Karen Luce

19 Admin Fee Contact Email

Admin Fee Contact Email

karen@ccsvcs.com

20 Admin Fee Contact Phone

Enter 10 digit phone number. (No dashes or extensions)
Example: 8668398477

2144152383

21 Purchase Order Contact Name

Purchase Order Contact Name. This person is responsible for receiving Purchase Orders from TIPS.

Chris Custard

22 Purchase Order Contact Email

Purchase Order Contact Email

chris@ccsvcs.com

23 Purchase Order Contact Phone

Enter 10 digit phone number. (No dashes or extensions)
Example: 8668398477

2144152383

24 Company Website

Company Website (Format - www.company.com)

No response

25 Federal ID Number:

Federal ID Number also known as the Employer Identification Number. (Format - 12-3456789)

45-4932931

26 Primary Address

Primary Address

505 EAGLE COVE CIRCLE

27 Primary Address City

Primary Address City

TIOGA

28

Primary Address State

Primary Address State (2 Digit Abbreviation)

TEXAS

29

Primary Address Zip

Primary Address Zip

76271

30

Search Words:

Please list search words to be posted in the TIPS database about your company that TIPS website users might sear ch. Words may be product names, manufacturers, or other words associated with the category of award. YOU MAY NOT LIST NON-CATEGORY ITEMS. (Limit 500 words) (Format: product, paper, construction, manufacturer name, et c.)

Asbestos Abatement, Mold Remediation, Hazardous spill control, Hazardous chemicals, Demolition, Electrical, Plum bing, HVAC, Fencing,

31

Do you want TIPS Members to be able to spend Federal grant funds with you if awarded? Is it your intent to be able to sell to our members regardless of the fund source, whether it be local, state or federal?

Most of our members receive Federal Government grants and they make up a significant portion of their budgets. T he members need to know if your company is willing to sell to them when they spend federal budget funds on their p urchase. There are attributes that follow that are provisions from the federal regulations in 2 CFR part 200. Your an swers will determine if your award will be designated as Federal or Education Department General Administrative R egulations (EDGAR)compliant.

Do you want TIPS Members to be able to spend Federal grant funds with you if awarded and is it your intent to be a ble to sell to our members regardless of the fund source, whether it be local, state or federal?

Yes

32

Yes - No

Certification of Residency (Required by the State of Texas) The vendor's ultimate parent company or majority owner :

(A) has its principal place of business in Texas;

OR

(B) employs at least 500 persons in Texas?

Yes

33

Company Residence (City)

Vendor's principal place of business is in the city of?

Arlington

34

Company Residence (State)

Vendor's principal place of business is in the state of?

TEXAS

35

Discount Offered - CAUTION READ CAREFULLY BECAUSE VENDORS FREQUENTLY MAKE MISTAKES ON THIS ATTRIBUTE QUESTION

Remember this is a MINIMUM discount percentage so, be sure the discount percentage inserted here can be applie d to ANY OFFERING OF GOODS OR SERVICES THROUGH OUT THE LIFE OF THE CONTRACT

CAUTION: BE CERTAIN YOU CAN HONOR THIS MINIMUM DISCOUNT PERCENTAGE ON ANY OFFERED SERVICE OR GOOD.

What is the MINIMUM percentage discount off of any item or service you offer to TIPS Members that is in your regul ar catalog (as defined in the RFP document), website, store or shelf pricing? The resulting price of any goods or se rvices Catalog list prices after this discount is applied is a ceiling on your pricing and not a floor because, in order to be more competitive in the
individual circumstance, you may offer a larger discount depending on the items or services purchased and the qua ntity at time of sale.
Must answer with a number between 0% and
100%.

5%

36

TIPS administration fee

By submitting a proposal, I agree that all pricing submitted to TIPS shall include the participation fee, as designated in the solicitation or as otherwise agreed in writing and shall be remitted to TIPS by the Vendor as agreed in the Ven dor agreement. I agree that the fee shall not and will not be added by the vendor as a separate line item on a TIPS member invoice, quote, proposal or any other written communications with the TIPS member.

37

Yes - No

Vendor agrees to remit to TIPS the required administration fee?

TIPS/ESC Region 8 is required by Texas Government Code § 791 to be compensated for its work and thus, failure t o agree shall render your response void and it will not be considered.

Yes

38

Yes - No

Do you offer additional discounts to TIPS members for large order quantities or large scope of work?

Yes

39

Years Experience

Company years experience in this category?

7

40

Resellers:

Does the vendor have resellers that it will name under this contract?

Resellers are defined as other companies that sell your products under an agreement with you, as the awarded ven dor of TIPS.

EXAMPLE: BIGmart is a reseller of ACME brand televisions. If ACME were a TIPS awarded vendor, then ACME woul d list BIGmart as a reseller.

(If yes, vendor should download the Reseller/Dealers spreadsheet from the Attachments section, fill out the form an d submit the document in the ”Response Attachments” RESELLERS section.

No

41

Price discount percentage are guaranteed for?

Does the vendor agrees to honor the proposed pricing discount percentage off regular catalog (as defined in the RFP document), website, store or shelf pricing for the term of the award?

YES

42

Right of Refusal

Does the proposing vendor wish to reserve the right not to perform under the awarded agreement with a TIPS mem ber at vendor's discretion?

Yes

43

NON-COLLUSIVE BIDDING CERTIFICATE

By submission of this bid or proposal, the Bidder certifies that:

1) This bid or proposal has been independently arrived at without collusion with any other Bidder or with any Compe titor;

2) This bid or proposal has not been knowingly disclosed and will not be knowingly disclosed, prior to the opening of bids, or proposals for this project, to any other Bidder, Competitor or potential competitor:

3) No attempt has been or will be made to induce any other person, partnership or corporation to submit or not to s ubmit a bid or proposal;

4) The person signing this bid or proposal certifies that he has fully informed himself regarding the accuracy of the statements contained in this certification, and under the penalties being applicable to the Bidder as well as to the pe rson signing in its behalf.

Not a negotiable term. Failure to agree will render your proposal non-responsive and it will not be considered.

44 CONFLICT OF INTEREST QUESTIONNAIRE - FORM CIQ -Do you have any CONFLICT OF INTEREST TO REPORT OR DISCLOSE under this statutory requirement?

Do you have any CONFLICT OF INTEREST TO REPORT OR DISCLOSE under this statutory requirement? YES or NO

If you have a conflict of interest as described in this form or the Local Government Code Chapter 176, cited therein- you are required to complete and file with TIPS.

You may find the Blank CIQ form on our website at:

Copy and Paste the following link into a new browser or tab:

https://www.tips-usa.com/assets/documents/docs/CIQ.pdf

There is an optional upload for this form provided if you have a conflict and must file the form.

No

45 Filing of Form CIQ

If yes (above), have you filed a form CIQ by uploading the form to this RFP as directed above?

No response

46 Regulatory Standing

I certify to TIPS for the proposal attached that my company is in good standing with all governmental agencies Fede ral or state that regulate any part of our business operations. If not, please explain in the next attribute question.

Yes

47 Regulatory Standing

Regulatory Standing explanation of no answer on previous question.

No response

48 Antitrust Certification Statements (Tex. Government Code § 2155.005)

By submission of this bid or proposal, the Bidder certifies that:

I affirm under penalty of perjury of the laws of the State of Texas that:

(1) I am duly authorized to execute this contract on my own behalf or on behalf of the company, corporation, firm, pa rtnership or individual (Company) listed below;

(2) In connection with this bid, neither I nor any representative of the Company has violated any provision of the Tex as Free Enterprise and Antitrust Act, Tex. Bus. & Comm. Code Chapter 15;

(3) In connection with this bid, neither I nor any representative of the Company has violated any federal antitrust law ;

(4) Neither I nor any representative of the Company has directly or indirectly communicated any of the contents of t his bid to a competitor of the Company or any other company, corporation, firm, partnership or individual engaged i n the same line of business as the Company.

49	**Suspension or Debarment Instructions** Instructions for Certification: 1. By answering yes to the next Attribute question below, the vendor and prospective lower tier participant is providi ng the certification set out herein in accordance with these instructions. 2. The certification in this clause is a material representation of fact upon which reliance was placed when this trans action was entered into. If it is later determined that the prospective lower tier participant knowingly rendered an err oneous certification in addition to other remedies available to the federal government, the department or agency wit h which this transaction originated may pursue available remedies, including suspension and / or debarment. 3. The prospective lower tier participant shall provide immediate written notice to the person to which this proposal i s submitted if at any time the prospective lower tier participant learns that its certification was erroneous when submi tted or has become erroneous by reason of changed circumstances. 4. The terms “covered transaction,” “debarred,” “suspended,” “ineligible,” “lower tier covered transaction,” “participa nts,” “person,” “primary covered transaction,” “principal,” “proposal” and “voluntarily excluded,” as used in this claus e, have the meanings set out in the Definitions and Coverage sections of rules implementing Executive Order 1254 9. You may contact the person to which this proposal is submitted for assistance in obtaining a copy of those regula tions. 5. The prospective lower tier participant agrees by submitting this form that, should the proposed covered transacti on be entered into, it shall not knowingly enter into any lower tier covered transaction with a person who is debarred , suspended, declared ineligible or voluntarily excluded from participation in this covered transaction, unless authori zed by the department or agency with which this transaction originated. 6. The prospective lower tier participant further agrees by submitting this form that it will include this clause titled “C ertification Regarding Debarment, Suspension, Ineligibility and Voluntary Exclusion-Lower Tier Covered Transaction ” without modification in all lower tier covered transactions and in all solicitations for lower tier covered transactions. 7. A participant in a covered transaction may rely upon a certification of a prospective participant in a lower tier cove red transaction that it is not debarred, suspended, ineligible or voluntarily excluded from the covered transaction, u nless it knows that the certification is erroneous. A participant may decide the method and frequency by which it det ermines the eligibility of its principals. Each participant may, but is not required to, check the Nonprocurement List. 8. Nothing contained in the foregoing shall be construed to require establishment of a system of records in order to render in good faith the certification required by this clause. The knowledge and information of a participant is not r equired to exceed that which is normally possessed by a prudent person in the ordinary course of business dealing s. 9. Except for transactions authorized under paragraph 5 of these instructions, if a participant in a covered transacti on knowingly enters into a lower tier covered transaction with a person who is suspended, debarred, ineligible or vol untarily excluded from participation in this transaction, in addition to other remedies available to the federal govern ment, the department or agency with which this transaction originated may pursue available remedies, including sus pension and / or debarment.

50

Suspension or Debarment Certification

By answering yes, you certify that no federal suspension or debarment is in place, which would preclude receiving a federally funded contract as described above.

Debarment and Suspension (Executive Orders 12549 and 12689)—A contract award (see 2 CFR 180.220) must not be made to parties listed on the government-wide exclusions in the System for Award Management (SAM), in accordance with the OMB guidelines at 2 CFR 180 that implement Executive
Orders 12549 (3 CFR part 1986 Comp., p. 189) and 12689 (3 CFR part 1989 Comp., p. 235), "Debarment and Suspension." SAM Exclusions contains the names of parties debarred, suspended, or otherwise excluded by agencies, as well as parties declared ineligible under statutory or regulatory authority other than Executive Order 12549.

By answering yes, you certify that no federal suspension or debarment is in place, which would preclude receiving a federally funded contract as described above.

Yes

51

Non-Discrimination Statement and Certification

In accordance with Federal civil rights law, all U.S. Departments, including the U.S. Department of Agriculture (USDA) civil rights regulations and policies, the USDA, its Agencies, offices, and employees, and institutions participating in or administering USDA programs are prohibited from discriminating based on race, color, national origin, religion, sex, gender identity (including gender expression), sexual orientation, disability, age, marital status, family/parental status, income derived from a public assistance program, political beliefs, or reprisal or retaliation for prior civil rights activity, in any program or activity conducted or funded by USDA (not all bases apply to all programs). Remedies and complaint filing deadlines vary by program or incident.

Persons with disabilities who require alternative means of communication for program information (e.g., Braille, large print, audiotape, American Sign Language, etc.) should contact the responsible Agency or USDA's TARGET Center at (202) 720-2600 (voice and TTY) or contact USDA through the Federal Relay Service at (800) 877-8339. Additionally, program information may be made available in languages other than English.

To file a program discrimination complaint, complete the USDA Program Discrimination Complaint Form, AD-3027, found online at How to File a Program Discrimination Complaint and at any USDA office or write a letter addressed to USDA and provide in the letter all of the information requested in the form. To request a copy of the complaint form, call (866) 632-9992. Submit your completed form or letter to USDA by: (1) mail: U.S. Department of Agriculture, Office of the Assistant Secretary for Civil Rights, 1400 Independence Avenue, SW, Washington, D.C. 20250-9410; (2) fax: (202) 690-7442; or (3)
email: program.intake@usda.gov.

(Title VI of the Education Amendments of 1972; Section 504 of the Rehabilitation Act of 1973; the Age Discrimination Act of 1975; Title 7 CFR Parts 15, 15a, and 15b; the Americans with Disabilities Act; and FNS Instruction 113-1, Civil Rights Compliance and Enforcement – Nutrition Programs and Activities)

All U.S. Departments, including the USDA are equal opportunity provider, employer, and lender.

Not a negotiable term. Failure to agree will render your proposal non-responsive and it will not be considered. I certify that in the performance of a contract with TIPS or its members, that our company will conform to the foregoing anti-discrimination statement and comply with the cited and all other applicable laws and regulations.

Yes

52

2 CFR PART 200 Contract Provisions Explanation

Required Federal contract provisions of Federal Regulations for Contracts for contracts with ESC Region 8 and TIP S Members:

The following provisions are required to be in place and agreed if the procurement is funded in any part with federal funds.

The ESC Region 8 and TIPS Members are the subgrantee or Subrecipient by definition. Most of the provisions are l ocated in 2 CFR PART 200 - Appendix II to Part 200—Contract Provisions for Non-Federal Entity Contracts Under F ederal Awards at 2 CFR PART 200. Others are included within 2 CFR part 200 et al.

In addition to other provisions required by the Federal agency or non-Federal entity, all contracts made by the non-Federal entity under the Federal award must contain provisions covering the following, as applicable.

53

2 CFR PART 200 Contracts

Contracts for more than the simplified acquisition threshold currently set at $150,000, which is the inflation adjusted amount determined by the Civilian Agency Acquisition Council and the Defense Acquisition Regulations Council (Co uncils) as authorized by 41 U.S.C. 1908, must address administrative, contractual, or legal remedies in instances wh ere contractors violate or breach contract terms, and provide for such sanctions and penalties as appropriate.

Notice: Pursuant to the above, when federal funds are expended by ESC Region 8 and TIPS Members, ESC Region 8 and TIPS Members reserves all rights and privileges under the applicable laws and regulations with respect to this procurement in the event of breach of contract by either party.

Does vendor agree?

Yes

54

2 CFR PART 200 Termination

Termination for cause and for convenience by the grantee or subgrantee including the manner by which it will be eff ected and the basis for settlement. (All contracts in excess of $10,000)

Pursuant to the above, when federal funds are expended by ESC Region 8 and TIPS Members, ESC Region 8 and TIPS Members reserves the right to terminate any agreement in excess
of $10,000 resulting from this procurement process for cause after giving the vendor an appropriate opportunity an d up to 30 days, to cure the causal breach of terms and conditions. ESC Region 8 and
TIPS Members reserves the right to terminate any agreement in excess of $10,000 resulting from this procurement process for convenience with 30 days notice in writing to the awarded vendor. The vendor
would be compensated for work performed and goods procured as of the termination date if for convenience of the ESC Region 8 and TIPS Members. Any award under this procurement process is not exclusive and the ESC Region 8 and TIPS reserves the right to purchase goods and services from other vendors when it is in the best interest of t he ESC Region 8 and TIPS.

Does vendor agree?

Yes

55

2 CFR PART 200 Clean Air Act

Clean Air Act (42 U.S.C. 7401-7671q.) and the Federal Water Pollution Control Act (33 U.S.C. 1251-1387), as amen ded—Contracts and subgrants of amounts in excess of $150,000 must contain a provision that requires the non-Fe deral award to agree to comply with all applicable standards, orders or regulations issued pursuant to the Clean Air Act (42 U.S.C. 7401-7671q) and the Federal Water Pollution Control Act as amended (33 U.S.C. 1251-1387). Violati ons must be reported to the Federal awarding agency and the Regional Office of the Environmental Protection Age ncy (EPA).

Pursuant to the Clean Air Act, et al above, when federal funds are expended by ESC Region 8 and TIPS Members, ESC Region 8 and TIPS Members requires that the proposer certify that during the term of an award by the ESC Region 8 and TIPS Members resulting from this procurement process the vendor agrees to co mply with all of the above regulations, including all of the terms listed and referenced therein.

Does vendor agree?

Yes

56

2 CFR PART 200 Byrd Anti-Lobbying Amendment

Byrd Anti-Lobbying Amendment (31 U.S.C. 1352)—Contractors that apply or bid for an award exceeding $100,000 must file the required certification. Each tier certifies to the tier above that it will not and has not used Federal appro priated funds to pay any person or organization for influencing or attempting to influence an officer or employee of any agency, a member of Congress, officer or employee of Congress, or an employee of a member of Congress in connection with obtaining any Federal contract, grant or any other award covered by 31 U.S.C. 1352. Each tier mus t also disclose any lobbying with non-Federal funds that takes place in connection with obtaining any Federal award . Such disclosures are forwarded from tier to tier up to the non-Federal award.

Pursuant to the above, when federal funds are expended by ESC Region 8 and TIPS Members, ESC Region 8 and TIPS Members requires the proposer certify that during the term and during the life of any contract with ESC Region 8 and TIPS Members resulting from this procurement process the vendor certifies to the terms included or referenc ed herein.

Does vendor agree?

Yes

57

2 CFR PART 200 Federal Rule

Compliance with all applicable standards, orders, or requirements issued under section 306 of the Clean Air Act (42 U.S.C. 1857(h)), section 508 of the Clean Water Act (33 U.S.C. 1368), Executive Order 11738, and Environmental P rotection Agency regulations (40 CFR part 15). (Contracts, subcontracts, and subgrants of amounts in excess of $1 00,000)

Pursuant to the above, when federal funds are expended by ESC Region 8 and TIPS Members, ESC Region 8 and TIPS Members requires the proposer certify that in performance of the contracts, subcontracts, and subgrants of a mounts in excess of $100,000, the vendor will be in compliance with all applicable standards, orders, or requirement s issued under section 306 of the Clean Air Act (42 U.S.C. 1857(h)), section 508 of the Clean Water Act (33 U.S.C. 1368), Executive Order 11738, and Environmental Protection Agency regulations (40 CFR part 15).

Does vendor certify that it is in compliance with the Clean Air Act?

Yes

58

2 CFR PART 200 Procurement of Recovered Materials

A non-Federal entity that is a state agency or agency of a political subdivision of a state and its contractors must co mply with section 6002 of the Solid Waste Disposal Act, as amended by the Resource Conservation and Recovery Act. The requirements of Section 6002 include procuring only items designated in guidelines of the Environmental P rotection Agency (EPA) at 40 CFR part 247 that contain the highest percentage of recovered materials practicable, consistent with
maintaining a satisfactory level of competition, where the purchase price of the item exceeds $10,000 or the value o f the quantity acquired during the preceding fiscal year exceeded $10,000; procuring solid waste management servi ces in a manner that maximizes energy and resource recovery; and establishing an affirmative procurement progra m for procurement of recovered materials identified in the EPA guidelines.

Does vendor certify that it is in compliance with the Solid Waste Disposal Act as described above?

Yes

59

Certification Regarding Lobbying

Applicable to Grants, Subgrants, Cooperative Agreements, and Contracts Exceeding $100,000 in Federal Funds

Submission of this certification is a prerequisite for making or entering into this transaction and is imposed by sectio n 1352, Title 31, U.S. Code. This certification is a material representation of fact upon which reliance was placed wh en this transaction was made or entered into. Any person who fails to file the required certification shall be subject t o a civil penalty of not less than $10,000 and not more than $100,000 for each such failure.

The undersigned certifies, to the best of his or her knowledge and belief, that:

(1) No Federal appropriated funds have been paid or will be paid by or on behalf of the undersigned, to any person for influencing or attempting to influence an officer or employee of any agency, a Member of Congress, an officer or employee of congress, or an employee of a Member of Congress in connection with the awarding of a Federal contr act, the making of a Federal grant, the making of a Federal loan, the entering into a cooperative agreement, and th e extension, continuation, renewal, amendment, or modification of a Federal contract, grant, loan, or cooperative ag reement.

(2) If any funds other than Federal appropriated funds have been paid or will be paid to any person for influencing or attempting to influence an officer or employee of any agency, a Member of Congress, an officer or employee of c ongress, or an employee of a Member of Congress in connection with this Federal grant or cooperative agreement, the undersigned shall complete and submit Standard Form-LLL, “disclosure Form to Report Lobbying,” in accordan ce with its instructions.

(3) The undersigned shall require that the language of this certification be included in the award documents for all c overed subawards exceeding $100,000 in Federal funds at all appropriate tiers and that all subrecipients shall certif y and disclose accordingly.

I HAVE NOT Lobbied per above

60

Lobbying Report Standard Form-LLL, “disclosure Form to Report Lobbying,”

ONLY IF you answered "I HAVE Lobbied per above" to attribute #66, please download and complete and upload the Standard Form-LLL, “disclosure Form to Report Lobbying,” in the Response attachments section.

61

Subcontracting with small and minority businesses, women's business enterprises, and labor surplus area firms.

Do you ever anticipate the possibility of subcontracting any of your work under this award if you are successful?

IF NO, DO NOT ANSWER THE NEXT ATTRIBUTE QUESTION. . IF YES, and ONLY IF YES, you must answer the nex t question YES if you want a TIPS Member to be authorized to spend Federal Grant Funds for Procurement.

YES

62	**ONLY IF YES TO THE PREVIOUS QUESTION OR if you ever do subcontract any part of your performance under the TIPS Agreement, do you agree to comply with the following federal requirements?** ONLY IF YES TO THE ABOVE QUESTIONS OR if you ever do subcontract any part of your performance under the TIPS Agreement, do you agree to comply with the following federal requirements? Federal Regulation 2 CFR §200.321 Contracting with small and minority businesses, women's business enterprises, and labor surplus area firms. (a)The non-Federal entity must take all necessary affirmative steps to assure that min ority businesses, women's business enterprises, and labor surplus area firms are used when possible. (b) Affirmative steps must include:(1) Placing qualified small and minority businesses and women's business enterpr ises on solicitation lists; (2) Assuring that small and minority businesses, and women's business enterprises are solicited whenever they are potential sources; (3) Dividing total requirements, when economically feasible, into smaller tasks or quantities to permit maximum partic ipation by small and minority businesses, and women's business enterprises; (4) Establishing delivery schedules, where the requirement permits, which encourage participation by small and min ority businesses, and women's business enterprises; (5) Using the services and assistance, as appropriate, of such organizations as the Small Business Administration a nd the Minority Business Development Agency of the Department of Commerce ; and (6) Requiring the prime contractor, if subcontracts are to be let, to take the affirmative steps listed in paragraphs(1) through (5) of this section. YES

63	**If proposing on PART 2, Davis-Bacon Act compliance.** IF proposing on PART 2, Texas Statute requires compliance with Davis-Bacon Act, as amended (40 U.S.C. 3141-31 48). When required by Federal program legislation, all prime construction contracts in excess of $2,000 awarded by non-Federal entities must include a provision for compliance with the Davis-Bacon Act (40 U.S.C. 3141-3144, and 3 146-3148) as supplemented by Department of Labor regulations (29 CFR Part S, "Labor Standards Provisions Appl icable to Contracts Covering Federally Financed and Assisted Construction"). In accordance with the statute, contra ctors must be required to pay wages to laborers and mechanics at a rate not less than the prevailing wages specifie d in a wage determination made by the Secretary of Labor. In addition, contractors must be required to pay wages n ot less than once a week. The non-Federal entity must place a copy of the current prevailing wage determination is sued by the Department of Labor in each solicitation. The decision to award a contract or subcontract must be cond itioned upon the acceptance of the wage determination. The non-Federal entity must report all suspected or report ed violations to the Federal awarding agency. The contracts must also include a provision for compliance with the C opeland "Anti-Kickback" Act {40 U.S.C. 314S), as supplemented by Department of Labor regulations (29 CFR Part 3, "Contractors and Subcontractors on Public Building or Public Work Financed in Whole or in Part by Loans or Gra nts from the United States"). The Act provides that each contractor or subrecipient must be prohibited from inducing , by any means, any person employed in the construction, completion, or repair of public work, to give up any part o f the compensation to which he or she is otherwise entitled. The non-Federal entity must report all suspected or rep orted violations to the Federal awarding agency. BY SUBMITTING A PROPOSAL FOR PART 2 OF THIS SOLICITATION, the Vendor agrees, AS REQUIRED BY LAW, t o comply with the Davis Bacon Act, IF APPLICABLE and if proposing on PART 2 of this solicitation.

64	**Contract Work Hours and Safety Standards Act (40 U.S.C. 3701-3708)** Where applicable, all contracts awarded by the non-Federal entity in excess of $100,000 that involve the employme nt of mechanics or laborers must include a provision for compliance with 40 U.S.C. 3702 and 3704, as supplemente d by Department of Labor regulations (29 CFR Part 5). Under 40 U.S.C. 3702 of the Act, each contractor must be r equired to compute the wages of every mechanic and laborer on the basis of a standard work week of 40 hours. W ork in excess of the standard work week is permissible provided that the worker is compensated at a rate of not less than one and a half times the basic rate of pay for all hours worked in excess of 40 hours in the work week. The req uirements of 40 U.S.C. 3704 are applicable to construction work and provide that no laborer or mechanic must be r equired to work in surroundings or under working conditions which are unsanitary, hazardous or dangerous. These requirements do not apply to the purchases of supplies or materials or articles ordinarily available on the open mark et, or contracts for transportation or transmission of intelligence. By submitting a proposal to PART 2 of this solicitation and IF the customer is utilizing federal funds as described ab ove, the Vendor agrees to comply with the Contract Work Hours and Safety Standards Act (40 U.S.C. 3701-3708).

65	**Indemnification** The ESC Region 8 and TIPS is a Texas Political Subdivision and a local governmental entity; therefore, is prohibited from indemnifying third parties pursuant to the Texas Constitution (Article 3, Section 52) except as specifically provided b y law or as ordered by a court of competent jurisdiction. A provision in a contract to indemnify or hold a party harmless is a pro mise to pay for any expenses the indemnified party incurs, if a specified event occurs, such as breaching the terms of the contract or negligently performing duties under the contract. Article III, Section 49 of the Texas Constitution states that "no debt shall be cre ated by or on behalf of the State ... " The Attorney General has counseled that a contractually imposed obligation of indemnity cre ates a "debt" in the constitutional sense. Tex. Att'y Gen. Op. No. MW-475 (1982). Contract clauses which require the System or insti tutions to indemnify must be deleted or qualified with "to the extent permitted by the Constitution and Laws of the State of Tex as." Liquidated damages, attorney's fees, waiver of vendor's liability, and waiver of statutes of limitations clauses should also be del eted or qualified with "to the extent permitted by the Constitution and laws of State of Texas." Not a negotiable term. Failure to agree will render your proposal non-responsive and it will not be considered. Do y ou agree to these terms? Yes

66 Remedies

The parties shall be entitled to exercise any right or remedy available to it either at law or in equity, subject to the choice of law, venue
and service of process clauses limitations agreed herein. Nothing in this agreement shall commit the TIPS to an arbitration resolution
of any disagreement under any circumstances. Any Claim arising out of or related to the Contract, except for those specifically waived
under the terms of the Contract, may, after denial of the Board of Directors, be subject to mediation at the request of either party. Any
issues not resolved hereunder MAY be referred to non-binding mediation to be conducted by a mutually agreed upon mediator as a
prerequisite to the filing of any lawsuit over such issue(s). The parties shall share the mediator's fee and any associated filing fee
equally. Mediation shall be held in Camp or Titus County, Texas. Agreements reached in mediation shall be reduced to writing, and
will be subject to the approval by the District's Board of Directors, signed by the Parties if approved by the Board of Directors, and, if
signed, shall thereafter be enforceable as provided by the laws of the State of Texas.

Do you agree to these terms?

Yes, I Agree

67 Remedies Explanation of No Answer

No response

68 Choice of Law

The agreement between the Vendor and TIPS/ESC Region 8 and any addenda or other additions resulting from this procurement process, however described, shall be governed by, construed and enforced in accordance with the laws of the State of Texas, regardless of any conflict of laws principles.
THIS DOES NOT APPLY to a vendor's agreement entered into with a TIPS Member, as the Member may be located outside Texas.

Not a negotiable term. Failure to agree will render your proposal non-responsive and it will not be considered. Do you agree to these terms?

Yes

69 Jurisdiction and Service of Process

Any Proceeding arising out of or relating to this procurement process or any contract issued by TIPS resulting from or any
contemplated transaction shall be brought in a court of competent jurisdiction in Camp County, Texas and each of th e parties
irrevocably submits to the exclusive jurisdiction of said court in any such proceeding, waives any objection it may no w or hereafter
have to venue or to convenience of forum, agrees that all claims in respect of the Proceeding shall be heard and de termined only in
any such court, and agrees not to bring any proceeding arising out of or relating to this procurement process or an y contract resulting
from or any contemplated transaction in any other court. The parties agree that either or both of them may file a co py of this paragraph
with any court as written evidence of the knowing, voluntary and freely bargained for agreement between the partie s irrevocably to
waive any objections to venue or to convenience of forum. Process in any Proceeding referred to in the first senten ce of this Section
may be served on any party anywhere in the world. Any dispute resolution process other than litigation shall have v enue in Camp County or Titus County Texas.

Not a negotiable term. Failure to agree will render your proposal non-responsive and it will not be considered. Do y ou agree to these terms?

Yes

70 Alternative Dispute Resolution Explanation of No Answer

No response

71 Infringement(s)

The successful vendor will be expected to indemnify and hold harmless the TIPS and its employees, officers, agents , representatives, contractors, assignees and designees from any and all third party claims and judgments involving infringement of patent, copyright, trade secrets, trade or service marks, and any other intellectual or intangible prop erty rights attributed to or claims based on the Vendor's proposal or Vendor’s performance of contracts awarded an d approved.

Do you agree to these terms?

Yes, I Agree

72 Infringement(s) Explanation of No Answer

No response

73 Acts or Omissions

The successful vendor will be expected to indemnify and hold harmless the TIPS, its officers, employees, agents, re presentatives, contractors, assignees and designees from and against any and all liability, actions, claims, demands or suits, and all related costs, attorney's fees and expenses arising out of, or resulting from any acts or omissions of the vendor or its agents, employees, subcontractors, or suppliers in the execution or performance of any agreemen ts
ultimately made by TIPS and the vendor.

Do you agree to these terms?

Yes, I Agree

74 Acts or Omissions Explanation of No Answer

No response

75	**Contract Governance** Any contract made or entered into by the TIPS is subject to and is to be governed by Section 271.151 et seq, Tex L oc Gov't Code. Otherwise, TIPS does not waive its governmental immunities from suit or liability except to the extent expressly waived by other applicable laws in clear and unambiguous language. Yes
76	**Payment Terms and Funding Out Clause** Payment Terms: TIPS or TIPS members shall not be liable for interest or late payment fees on past due balances at a rate higher tha n permitted by the laws or regulations of the jurisdiction of the TIPS Member. Funding Out Clause: Vendor agrees to abide by the laws and regulations, including Texas Local Government Code § 271.903, or any sta tutory or regulatory limitations of the jurisdiction of any TIPS Member which governs contracts entered into by the V endor and TIPS or a TIPS Member that requires all contracts approved by TIPS or a TIPS Member are subject to th e budgeting and appropriation of currently available funds by the entity or its governing body. See statute(s) for specifics or consult your legal counsel. Not a negotiable term. Failure to agree will render your proposal non-responsive and it will not be considered. Do you agree to these terms? Yes

77

Insurance and Fingerprint Requirements Information

Insurance

If applicable and your staff will be on TIPS member premises for delivery, training or installation etc. and/or with an a utomobile, you must carry automobile insurance as required by law. You may be asked to provide proof of insurance.

Fingerprint

It is possible that a vendor may be subject to Chapter 22 of the Texas Education Code. The Texas Education Code, Chapter 22, Section 22.0834. Statutory language may be found at: http://www.statutes.legis.state.tx.us/

If the vendor has staff that meet both of these criterion:

(1) will have continuing duties related to the contracted services; and

(2) has or will have direct contact with students

Then you have ”covered” employees for purposes of completing the attached form.

TIPS recommends all vendors consult their legal counsel for guidance in compliance with this law. If you have questi ons on how to comply, see below. If you have questions on compliance with this code section, contact the Texas Dep artment of Public Safety Non-Criminal Justice Unit, Access and Dissemination Bureau, FAST-FACT at NCJU@txdps.state.tx.us and you should send an email identifying you as a contractor to a Texas Independent Scho ol District or ESC Region 8 and TIPS. Texas DPS phone number is (512) 424-2474.

See form in the next attribute to complete entitled:
Texas Education Code Chapter 22 Contractor Certification for Contractor Employees

78

Texas Education Code Chapter 22 Contractor Certification for Contractor Employees

Introduction: Texas Education Code Chapter 22 requires entities that contract with school districts to provide service s to obtain criminal history record information regarding covered employees. Contractors must certify to the district t hat they have complied. Covered employees with disqualifying criminal histories are prohibited from serving at a sch ool district.

Definitions: Covered employees: Employees of a contractor or subcontractor who have or will have continuing dutie s related to the service to be performed at the District and have or will have direct contact with students. The District will be the final arbiter of what constitutes direct contact with students. Disqualifying criminal history: Any conviction or other criminal history information designated by the District, or one of the following offenses, if at the time of the o ffense, the victim was under 18 or enrolled in a public school:

(a) a felony offense under Title 5, Texas Penal Code; (b) an offense for which a defendant is required to register as a sex offender under Chapter 62, Texas Code of Criminal Procedure; or (c) an equivalent offense under federal law or the laws of another state.

I certify that:

NONE (Section A) of the employees of Contractor and any subcontractors are covered employees, as defined abo ve. If this box is checked, I further certify that Contractor has taken precautions or imposed conditions to ensure tha t the employees of Contractor and any subcontractor will not become covered employees. Contractor will maintain t hese precautions or conditions throughout the time the contracted services are provided.

OR

SOME (Section B) or all of the employees of Contractor and any subcontractor are covered employees. If this box is checked, I further certify that:

(1) Contractor has obtained all required criminal history record information regarding its covered employees. None of the covered employees has a disqualifying criminal history.

(2) If Contractor receives information that a covered employee subsequently has a reported criminal history, Contra ctor will immediately remove the covered employee from contract duties and notify the District in writing within 3 busi ness days.

(3) Upon request, Contractor will provide the District with the name and any other requested information of covered employees so that the District may obtain criminal history record information on the covered employees.

(4) If the District objects to the assignment of a covered employee on the basis of the covered employee's criminal h istory record information, Contractor agrees to discontinue using that covered employee to provide services at the District.

Noncompliance or misrepresentation regarding this certification may be grounds for contract termination.

Some

79	**Texas Business and Commerce Code § 272 Requirements as of 9-1-2017** SB 807 prohibits construction contracts to have provisions requiring the contract to be subject to the laws of anothe r state, to be required to litigate the contract in another state, or to require arbitration in another state. A contract wit h such provisions is voidable. Under this new statute, a “construction contract” includes contracts, subcontracts, or agreements with (among others) architects, engineers, contractors, construction managers, equipment lessors, or materials suppliers. “Construction contracts” are for the design, construction, alteration, renovation, remodeling, or repair of any building or improvement to real property, or for furnishing materials or equipment for the project. The t erm also includes moving, demolition, or excavation. BY RESPONDING TO THIS SOLICITATION, AND WHEN APPLI CABLE, THE PROPOSER AGREES TO COMPLY WITH THE TEXAS BUSINESS AND COMMERCE CODE § 272 WH EN EXECUTING CONTRACTS WITH TIPS MEMBERS THAT ARE TEXAS GOVERNMENT ENTITIES.

80	**Texas Government Code 2270 Verification Form** Texas Government Code 2270 Verification Form Texas 2017 House Bill 89 has been signed into law by the governor and as of September 1, 2017 will be codified as Texas Government Code § 2270 and 808 et seq. The relevant section addressed by this form reads as follows: Texas Government Code Sec. 2270.002. PROVISION REQUIRED IN CONTRACT. A governmental entity may not ent er into a contract with a company for goods or services unless the contract contains a written verification from the c ompany that it: (1) does not boycott Israel; and (2) will not boycott Israel during the term of the contract.engaged by ESC Region 8/The Interlocal Purchasing System (TIPS) 4845 Highway 271 North Pittsburg,TX,75686 verify by this writing that the above-named company affirms that it (1) does not boycott Israel; and (2) will not boycot t Israel during the term of this contract, or any contract with the above-named Texas governmental entity in the futur e. I further affirm that if our company’s position on this issue is reversed and this affirmation is no longer valid, that t he above-named Texas governmental entity will be notified in writing within one (1) business day and we understand that our company’s failure to affirm and comply with the requirements of Texas Government Code 2270 et seq. shall be grounds for immediate contract termination without penalty to the above-named Texas governmental entity. AND our company is not listed on and we do not do business with companies that are on the the Texas Comptroller of Pu blic Accounts list of Designated Foreign Terrorists Organizations per Texas Gov't Code 2270.0153 found at https://c omptroller.texas.gov/purchasing/docs/foreign-terrorist.pdf I swear and affirm that the above is true and correct. YES

81

Logos and other company marks

Please upload your company logo to be added to your individual profile page on the TIPS website. If any particular specifications are required for use of your company logo, please upload that information under the "Logo and Other Company Marks" section under the “Response Attachment” tab. Preferred Logo Format: 300 x 225 px - .png, .eps, .jpeg preferred

Potential uses of company logo:

* Your Vendor Profile Page of TIPS website

* Potentially on TIPS website scroll bar for Top Performing Vendors

* TIPS Quarterly eNewsletter sent to TIPS Members

* Co-branding Flyers and or email blasts to our TIPS Members (Permission and approval will be obtained before publishing)

82

Solicitation Deviation/Compliance

Does the vendor agree with the General Conditions Standard Terms and Conditions or Item Specifications listed in this proposal invitation?

Yes

83

Solicitation Exceptions/Deviations Explanation

If the bidder intends to deviate from the General Conditions Standard Terms and Conditions or Item Specifications listed in this proposal invitation, all such deviations must be listed on this attribute, with complete and detailed conditions and information included or attached.
TIPS will consider any deviations in its proposal award decisions, and TIPS reserves the right to accept or reject any bid based upon any deviations indicated below or in any attachments or inclusions.
In the absence of any deviation entry on this attribute, the proposer assures TIPS of their full compliance with the Standard Terms and Conditions, Item Specifications, and all other information contained in this Solicitation.

No response

84

Agreement Deviation/Compliance

Does the vendor agree with the language in the Vendor Agreement?

Yes

85

Agreement Exceptions/Deviations Explanation

If the proposing Vendor desires to deviate form the Vendor Agreement language, all such deviations must be listed on this attribute, with complete and detailed conditions and information included. TIPS will consider any deviations in its proposal award decisions, and TIPS reserves the right to accept or reject any proposal based upon any deviations indicated below. In the absence of any deviation entry on this attribute, the proposer assures TIPS of their full compliance with the Vendor Agreement.

No response

86

Long Term Cost Evaluation Criterion # 4 on PART 1 EVALUATION ONLY

READ CAREFULLY and see in the RFP document under "Proposal Scoring and Evaluation".
Points will be assigned to this criterion based on your answer to this Attribute. Points are awarded if you agree not i ncrease your catalog prices (as defined herein) more than X% annually over the previous year for years two and thr ee and potentially year four, unless an exigent circumstance exists in the marketplace and the excess price increase which exceeds X% annually is supported by documentation provided by you and your suppliers and shared with TIP S, if requested. If you agree NOT to increase prices more than 5%, except when justified by supporting documentati on, you are awarded 10 points; if 6% to 14%, except when justified by supporting documentation, you receive 1 to 9 points incrementally. Price increases 14% or greater, except when justified by supporting documentation, receive 0 points.

price increases will be <7% annually per question

87

Felony Conviction Notice

Texas Education Code, Section 44.034, Notification of Criminal History, Subsection (a), states “a person or business entity that enters into a contract with a school district must give advance notice to the district if the person or an own er or operator of the business entity has been convicted of a felony. The notice must include a general description of the conduct resulting in the conviction of a felony.” Subsection (b) states “a school district may terminate a contra ct with a person or business entity if the district determines that the person or business entity failed to give notice as required by Subsection (a) or misrepresented the conduct resulting in the conviction. The district must compensate the person or business entity for services performed before the termination of the contract.” (c) This section does n ot apply to a publicly held corporation. The person completing this proposal certifies that they are authorized to pro vide the answer to this question.
Select A., B. or C.
A. My firm is a publicly held corporation; therefore, this reporting requirement is not applicable.
OR B.My firm is not owned nor operated by anyone who has been convicted of a felony, OR
C. My firm is owned or operated by the following individual(s) who has/have been convicted of a felony. (if you answ er C below, you are required to provide information in the next attribute.

B. Firm not owned nor operated by felon; per above

88

If you answered C. My Firm is owned or operated by a felon to the previous question, you are REQUIRED TO ANSWER THE FOLLOWING QUESTIONS.

If you answered C. My Firm is owned or operated by a felon to the previous question, you must provide the following information.

1. Name of Felon(s)

2. The named person's role in the firm, and

3. Details of Conviction(s).

No response

89

Required Confidentiality Claim Form

Required Confidentiality Claim Form
This form is required by TIPS. By submitting a response to this solicitation you agree to download from the “Attachm ents” section, complete according to the instructions on the form, then uploading the completed form, with any confi dential attachments, if applicable, to the “Response Attachments” section titled “Confidentiality Form” in order to pro vide to TIPS the completed form titled, “CONFIDENTIALITY CLAIM FORM”. By completing this process, you provide us with the information we require to comply with the open record laws of the State of Texas as they may apply to yo ur proposal submission. If you do not provide the form with your proposal, an award will not be made if your propos al is qualified for award, until TIPS has an accurate, completed form from you.
Read the form carefully before completing and if you have any questions, email Rick Powell at TIPS at rick.powell@t ips-usa.com

90	**Choice of Law clauses for TIPS Members** If the vendor is awarded a contract with TIPS under this solicitation, the vendor agrees to make any Choice of Law c lauses in any contract or agreement entered into between the awarded vendor and with a TIPS member entity to re ad as follows: "Choice of law shall be the laws of the state where the customer resides" or words to that effect. Agreed
91	**Venue of dispute resolution with a TIPS Member** In the event of litigation or use of any dispute resolution model when resolving disputes with a TIPS member entity a s a result of a transaction between the vendor and TIPS or the TIPS member entity, the Venue for any litigation or ot her agreed upon model shall be in the state and county where the customer resides unless otherwise agreed by the parties at the time the dispute resolution model is decided by the parties. Agreed
92	**Indemnity Limitation with TIPS Members** Texas and other states restrict by law or state Constitution the ability of a governmental entity to indemnify others. TI PS requires that any contract entered into between a vendor and TIPS or a TIPS Member as a result of an award u nder this Solicitation limit the requirement that the Customer indemnify the Vendor by either eliminating any such ind emnity requirement clauses in any agreements, contracts or other binding documents **OR** by prefacing all indemnity clauses required of TIPS or the TIPS Member entity with the following: "To the extent permitted by the laws or the Co nstitution of the state where the customer resides, ". **Agreement is a required condition to award of a contract resulting from this Solicitation.** Agreed
93	**Arbitration Clauses** Except for certain circumstances, TIPS forbids a mandatory arbitration clause in any contract or agreement entered into between the awarded vendor with TIPS or a TIPS member entity. Does the vendor agree to exclude any arbitrati on requirement in any contracts or agreement entered into between TIPS or a TIPS member entity through an awar ded contract with TIPS? **Agreement is a required condition to award of a contract resulting from this Solicitation.** Agreed

REFERENCES

Please provide three (3) references, preferably from school districts or other governmental entities who have used your services within the last three years. Additional references may be required. DO NOT INCLUDE TIPS EMPLOYEES AS A REFERENCE.

Please verify your references are current and valid, as they are a SIGNIFICANT required evaluation component of the PART 2 evaluation process, and the evaluation cannot be completed without responses from these references when we contact them.

You may provide more than three (3) references.

Entity Name	Contact Person	**VALID EMAIL IS REQUIRED**	Phone
City of Lewisville	Francis Mascarenhas	fmascarenhas@cityoflewisville.com	972-219-3769
City of Garland	Ginny Holliday	gholliday@garlandtx.gov	972-205-4080
University of Texas at Arlington	Don Lange	dlange@uta.edu	817-272-2096
City of Mesquite	Rob Duff	rduff@cityofmesquite.com	214-437-0553

CERTIFICATION BY CORPORATE OFFERER

COMPLETE ONLY IF OFFERER IS A CORPORATION,
THE FOLLOWING CERTIFICATE SHOULD BE EXECUTED AND INCLUDED AS PART OF PROPOSAL FORM/PROPOSAL FORM.

OFFERER: CUSTARD CONSTRUCTION SERVICES
(Name of Corporation)

CALEN McADAMS **certify that I am the Secretary of the Corporation**
I, (Name of Corporate Secretary)

named as OFFERER herein above; that

CHRIS CUSTARD
(Name of person who completed proposal document)

who signed the foregoing proposal on behalf of the corporation offerer is the authorized person that is acting as

VICE PRESIDENT
(Title/Position of person signing proposal/offer document within the corporation)

of the said Corporation; that said proposal/offer was duly signed for and in behalf of said corporation by authority of its governing body, and is within the scope of its corporate powers.

CORPORATE SEAL if available

SIGNATURE

12·19·2019
DATE

AGENDA

TIPS RFP # 191002

Required Confidential Information Status Form

CONFIDENTIAL INFORMATION SUBMITTED IN RESPONSE TO COMPETITIVE PROCUREMENT REQUESTS OF EDUCATION SERVICE CENTER REGION 8 AND TIPS (ESC8) IS GOVERNED BY TEXAS GOVERNMENT CODE, CHAPTER 552

If you consider any portion of your proposal to be confidential information and not subject to public disclosure pursuant to Chapter 552 Texas Gov't Code or other law(s), **you must attach a copy of all claimed confidential materials within your proposal and put this COMPLETED form as a cover sheet to said materials then scan, name "CONFIDENTIAL" and upload with your proposal submission.** (You must include all the confidential information in the submitted proposal. The copy uploaded is to indicate which material in your proposal, if any, you deem confidential in the event the receives a Public Information Request.) ESC8 and TIPS will follow procedures of controlling statute(s) regarding any claim of confidentiality and shall not be liable for any release of information required by law. Upon your claim and your defense to the Office of Texas Attorney General is required to make the final determination whether the information submitted by you and held by ESC8 and TIPS is confidential and exempt from public disclosure.

CUSTARD CONSTRUCTION SERVICES
Name of company

CHRIS CUSTARD PARTNER
Printed Name and Title of authorized company officer declaring below the confidential status of material

505 EAGLE COVE CIR TIOGA TX 76271 214.415.2383
Address **City** **State** **ZIP** **Phone**

ALL VENDORS MUST COMPLETE THE ABOVE SECTION.

I DO CLAIM parts of my proposal to be confidential and *DO NOT* desire to expressly waive a claim of confidentiality of all information contained within our response to the solicitation. The attached contains material from our proposal that I classify and deem confidential under Texas Gov't Code Sec. 552 or other law(s) and I invoke my statutory rights to confidential treatment of the enclosed materials.

ATTACHED ARE COPIES OF_____PAGES OF CLAIMED CONFIDENTIAL MATERIAL FROM OUR PROPOSAL THAT WE DEEM TO BE NOT PUBLIC INFORMATION AND WILL DEFEND THAT CLAIM TO THE TEXAS ATTORNEY GENERAL IF REQUESTED WHEN A PUBLIC INFORMAITON REQUEST IS MADE FOR OUR PROPOSAL.

Signature_____ Date 12/19/2019

OR ----------

I DO NOT CLAIM any of my proposal to be confidential, complete the section below.

Express Waiver: I desire to expressly waive any claim of confidentiality as to any and all information contained within our response to the competitive procurement process (e.g. RFP, CSP, Bid, RFQ, etc.) by completing the following and submitting this sheet with our response to Education Service Center Region 8 and TIPS.

Signature_____ Date 12/19/2019

AGENDA

GLENN HEGAR TEXAS COMPTROLLER OF PUBLIC ACCOUNTS

The Texas Comptroller of Public Accounts (CPA) administers the Statewide Historically Underutilized Business (HUB) Program for the State of Texas, which includes certifying minority, woman, and service disabled veteran-owned businesses as HUBs and facilitates the use of HUBs in state procurement and provides them with information on the state's procurement process.

We are pleased to inform you that your application for certification/re-certification as a HUB has been approved. Your company's profile is listed in the State of Texas HUB Directory and may be viewed online at https://mycpa.cpa.state.tx.us/tpasscmblsearch/index.jsp. Provided that your company continues to meet HUB eligibility requirements, the attached HUB certificate is valid for the time period specified.

You must notify the HUB Program in writing of any changes affecting your company's compliance with the HUB eligibility requirements, including changes in ownership, day-to-day management, control and/or principal place of business. *Note: Any changes made to your company's information may require the HUB Program to re-evaluate your company's eligibility.*

Please visit our website at http://comptroller.texas.gov/procurement/prog/hub/ and reference our publications (i.e. Grow Your Business pamphlet, HUB Brochure and Vendor Guide) providing addition information on state procurement resources that can increase your company's chances of doing business with the state.

Thank you for your participation in the HUB Program! If you have any questions, you may contact a HUB Program representative at 512-463-5872 or toll-free in Texas at 1-888-863-5881.

Texas Historically Underutilized Business (HUB) Certificate

HUB
Statewide Historically Underutilized Business Program

Certificate/VID Number:	**1454932931700**
File/Vendor Number:	**485527**
Approval Date:	**29-MAR-2018**
Scheduled Expiration Date:	**29-MAR-2022**

The Texas Comptroller of Public Accounts (CPA), hereby certifies that

CCS CUSTARD CONSTRUCTION

has successfully met the established requirements of the State of Texas Historically Underutilized Business (HUB) Program to be recognized as a HUB. This certificate printed 30-MAR-2018, supersedes any registration and certificate previously issued by the HUB Program. If there are any changes regarding the information (i.e., business structure, ownership, day-to-day management, operational control, business location) provided in the submission of the business' application for registration/certification as a HUB, you must immediately (within 30 days of such changes) notify the HUB Program in writing. The CPA reserves the right to conduct a compliance review at any time to confirm HUB eligibility. HUB certification may be suspended or revoked upon findings of ineligibility.

Laura Cagle-Hinojosa, Statewide HUB Program Manager
Statewide Support Services Division

Note: In order for State agencies and institutions of higher education (universities) to be credited for utilizing this business as a HUB, they must award payment under the Certificate/VID Number identified above. Agencies, universities and prime contractors are encouraged to verify the company's HUB certification prior to issuing a notice of award by accessing the Internet (**https://mycpa.cpa.state.tx.us/tpasscmblsearch/index.jsp**) or by contacting the HUB Program at **512-463-5872** or toll-free in Texas at **1-888-863-5881.**

Rev. 06/16

CUSTARD CONSTRUCTION SERVICES

Custard Construction Services is a full service General Contractor

We specialize in interior remodels. We do demolition, flooring of all kinds, framing, drywall, ceilings, both acoustical and drywall, cabinets, electrical, plumbing, hvac and painting.

We also do Asbestos Abatement and hazardous material removal.

CUSTARD CONSTRUCTION SERVICES

PO BOX 271080

FLOWER MOUND, TEXAS 75027-1080

214-415-2383

TEXAS HUB CERTIFICATION # 1454932931700

TIPS CONTRACT # 191002

City of Bedford Abatement

July 8, 2020

OVERVIEW

1. Project Background and Description

Kelly Snook

2000 Forest Ridge Drive

Bedford, Texas 76021-5713

Kelly.snook@bedfordtx.gov

2. Project Scope

- Supply all Materials and Labor for Asbestos Abatement per Survey provided by HALFF Associates proposal Dated May 11, 2020
- Onsite ACM Dumpster
- Removal and Disposal; of all ACM per federal Guidelines
- SCOPE OF WORK
- Activity Center and Gym 1. Removal of 2000 SF plaster ceiling from the stairwells/rooms. 2. Removal of 30 SF gray window caulking original office and basement windows.
-
- Theater Building 1. Removal of 260 floor tiles/mastic under ceramic tiles. 2. Removal of 480 SF floor tiles under carpet. 3. Removal of 1790 mastic under carpet. 4. Removal of 50 SF roof material.

-
- The Clubhouse – Special Needs Daycare Facility 1. Removal of 5600 SF floor tiles/mastic from the common areas of building.
-
- Senior Center 1. Removal of 4250 SF floor tiles/sheet flooring from the common areas and room 112Acloset.
-
- Arts Council Building 1. Removal of 1425 SF sheet rock/joint compound from first floor Art room. Boys Ranch Park 1. Removal of 250 SFG Drywall. 2. Removal of 250 SF Roofing.
- METHOD OF REMOVAL
- The work areas will be regulated, contained, ACM will be removed wet, as to eliminate any friable materials. All waste will be double bagged or bagged/drummed and disposed of in accordance with all state and federal regulations and laws. Employee PPE will meet all qualifications of applicable state and federal regulations.
- Normal working hours, 10 hour shifts 7am-5pm
- Continuous Clean
- Final clean

3. Specific Exclusions from Scope

- Anything not specifically stated in scope of work
- Any Engineering or Design associated with project
- Permits or any fees associated with permits
- Utility disconnect
- Fees associated with City Permits and Abatement notifications
- Water for Abatement and Demo Supplied by City
- Electricity supplied by City of Bedford
- Bond
- Sales Tax

4. Timeline / Schedule

- Upon award of Contract, there is a 10 day notification period required by the state before work can begin
- Asbestos Abatement will take 17 working days

5. State Notification Fee

- To be paid by City of Bedford

Alternate #1 BOND	**3%**	**$ 1,764.24**
Total without bond		**$ 58,808.12**

Invoice to be paid in full within 30 days of completion and acceptance of work

Approved By	7-8-2020 Date	Approved By	Date

Custard Construction Services / 214-415-2383 / chris@ccsvcs.com

AGENDA

Council Agenda Background

PRESENTER: Kenneth Overstreet, Public Works Director **DATE:** 07/28/20

Council Mission Area: Protect the vitality of neighborhoods.

ITEM:

Consider a resolution authorizing the Interim City Manager to enter into an agreement with Ark Contracting Services, LLC, in the amount of $475,948, for the Brookwood Hills Stream and Sanitary Sewer Rehabilitation project.

City Attorney Review: Yes

SUMMARY:

Staff solicited bids for Brookwood Hills Stream and Sanitary Sewer Rehabilitation project. The project consists of erosion control to protect City infrastructure and sanitary sewer rehabilitation. Seven bids were received, with the lowest qualified bidder being Ark Contracting Services, LLC.

BACKGROUND:

On July 29, 2015, residents of the Brookwood Hills Addition met with staff regarding the bank erosion that the stream was experiencing. During the meeting, other issues were brought forward that indicated a stream study was needed. It also became evident that the sewer line that crosses the channel needed to be replaced due to a swag in the line and that the erosion, in various areas, was undermining sanitary sewer lines, manholes and storm sewer outfalls. While the initial concern by residents could not be addressed because the channel is private property, it was evident that that work needed to be completed to protect the City's infrastructure.

Staff proposed the City utilize the professional services of Baird, Hampton & Brown, Inc. (BHB) for this study. On September 22, 2015, BHB was awarded an Engineering contract for the Brookwood Stream Study for future drainage system improvements in the Brookwood Hills Addition.

On January 24, 2017, BHB was awarded a Professional Services Agreement to design the Brookwood Hills Stream and Sanitary Sewer Rehabilitation project based on results of the Brookwood Stream Study. The Professional Services Agreement included full engineering services: field surveying, construction plan designs, opinion of probable cost, bidding services, and contractor qualification and recommendation. This Agreement included permission from the U.S. Army Corp of Engineers for working in a waterway, as well as several easements from adjacent property owners.

The construction project was advertised online using CivCast U.S.A. The City was able to reach out to 71 prospective contractors, sub-contractors, suppliers, and plan rooms interested in the project. There were two Addendums issued during the biding process for clarification from questions regarding the project. A bid opening was held on July 2, 2020. Seven bids were received. Ark Contacting Services, in Kennedale, Texas, submitted the lowest qualified bid in the amount of $475,948.00. The bids varied as follows:

- Lowest: $475,948.00
- Average: $646,668.51
- Highest: $827,553.00
- Budget: $484,484.00

This project includes the installation of gabion baskets, gabion mattresses, 6" cable-tied concrete erosion protection, removal and replacement of the sewer line, and other sewer related items.

BHB recommends entering into a contract with Ark Contracting Services, LLC for the Brookwood Hills Stream and Sanitary Sewer Rehabilitation project. Ark Contracting was recommended by a Professional Engineer with GWC Engineering, who stated they worked with Ark Contracting for over 20 years on multiple drainage and stream projects without any contested change orders or conflicts originating from the contractor.

In addition, they successfully completed the Sulphur Branch Trunk Sewer Rehab/Replacement Segment 11 project for the City of Bedford in 2016. Ark Contracting completed more than 350 major gabion projects while operating under various entities. They have extensive water, sewer and storm sewer pipeline experience. Ark Contracting, under the name S.J Lewis, was the utility-sub-contractor for Bluebonnet Construction, the contractor for North Tarrant Express working in Bedford. In addition, they successfully completed a large project in the City of Arlington at Glory Park, which included water, sewer and drainage from Division Road to Cowboy Stadium, plus many other smaller utility projects.

If approved, funding in the amount of $475,948 will be paid from the 2011 Stormwater GO Bond and the Stormwater CO Bond.

RECOMMENDATION:

Staff recommends the following motion:

Approval of a resolution authorizing the Interim City Manager to enter into an agreement with Ark Contracting Services, LLC, in the amount of $475,948, for the Brookwood Hills Stream and Sanitary Sewer Rehabilitation project.

FISCAL IMPACT:

2011 Stormwater GO Bonds:	**$331,593.67**
2011 Stormwater CO Bonds:	**$158,228.17**
Total Bonds:	**$489,821.84**
Bid Amount:	**$475,948.00**
Remaining Project Balance:	**$13,873.84**

ATTACHMENTS:

Resolution
Agreement
Bid Tabulation
Map
BHB Recommendation Letter

AGENDA

RESOLUTION NO. 2020-

A RESOLUTION AUTHORIZING THE INTERIM CITY MANAGER TO ENTER INTO AN AGREEMENT WITH ARK CONTRACTING SERVICES, LLC, IN THE AMOUNT OF $475,948, FOR THE BROOKWOOD HILLS STREAM AND SANITARY SEWER REHABILITATION PROJECT.

WHEREAS, the City Council of Bedford, Texas recognizes that the protection from stream erosion helps to protect the vitality of neighborhoods; and,

WHEREAS, the City Council of Bedford, Texas recognizes the importance of providing improvements to aging sanitary sewers in order to be responsive to the needs of the community.

NOW, THEREFORE, BE IT RESOLVED BY THE CITY COUNCIL OF THE CITY OF BEDFORD, TEXAS:

SECTION 1. **That the findings above are found to be true and correct, and are incorporated herein.**

SECTION 2. **That the Interim City Manager is authorized to enter into an agreement with Ark Contracting Services, LLC, in the amount of $475,948, for the Brookwood Hills Stream and Sanitary Sewer Rehabilitation project.**

SECTION 3. **That funding, in the amount of $475,948, will be paid from 2011 Stormwater GO Bonds and 2011 Stormwater CO Bonds.**

PRESENTED AND PASSED this 28th day of July 2020 by a vote of __ ayes, __ nays, and __ abstentions, at a regular meeting of the City Council of the City of Bedford, Texas.

_____

Michael Boyter, Mayor

ATTEST:

_____

Michael Wells, City Secretary

AGREEMENT BETWEEN OWNER AND CONTRACTOR

THIS AGREEMENT is by and between the City of Bedford, Texas

(hereinafter called Owner) and Ark Contracting Services, LLC

(hereinafter called Contractor).

Owner and Contractor, in consideration of the mutual covenants hereinafter set forth, agree as follows:

ARTICLE 1 – WORK

1.01 Contractor shall complete all Work as specified or indicated in the Contract Documents. The Work is generally described as follows:

The project includes, among other items, approximately 622 CY of gabion basket, 761 SY of gabion mattress, 270 SY of concrete erosion protection, 750 CY of excavation and haul-off, 245 CY of fill, and 190 LF of removal and replacement of sanitary sewer generally located along the drainage channel east of Brookside Drive, bounded by Cheek Sparger Road and Cummings Drive.

ARTICLE 2- THE PROJECT

2.01 The Project for which the Work under the Contract Documents may be the whole or only a part is generally described as follows:

City of Bedford
Tarrant County, Texas
Bid Reference Number: SW-20-01
Brookwood Hills Stream and Sanitary Sewer Rehabilitation

ARTICLE 3 – ENGINEER

3.01 The Project has been designed by the City of Bedford, Engineering Department who is herein after called Engineer and who is to act as Owner's representative, assume all duties and responsibilities, and have the rights and authority assigned to Engineer in the Contract Documents in connection with the completion of the Work in accordance with the Contract Documents.

ARTICLE 4 – CONTRACT TIMES

4.01 TIME OF THE ESSENCE

A. All time limits for Milestones, if any, Substantial Completion, and completion and readiness for final payment as stated in the Contract Documents are of the

essence of the Contract.

4.02 DAYS TO ACHIEVE SUBSTANTIAL COMPLETION AND FINAL PAYMENT

A. The Work will be substantially completed within the time stated in the Instructions to Bidders.

4.03 LIQUIDATED DAMAGES

A. Contractor and Owner recognize that time is of the essence of this Agreement and that Owner will suffer financial loss if the Work is not completed within the times specified in paragraph 4.02 above, plus any extensions thereof allowed in accordance with Article 11 of the General Conditions. The parties also recognize the delays, expense, and difficulties involved in proving in a legal or arbitration proceeding the actual loss suffered by Owner if the Work is not completed on time. Accordingly, instead of requiring any such proof, Owner and Contractor agree that as liquidated damages for delay (but not as a penalty), Contractor shall pay Owner $500.00 for each day that expires after the time specified in paragraph 4.02 for Substantial Completion until the Work is substantially complete.

ARTICLE 5- CONTRACT PRICE

5.01 CONTRACT PRICE

Owner shall pay Contractor for completion of the Work in accordance with the Contract Documents an amount in current funds equal to the sum of the amount determined pursuant to paragraph 5.01. A below:

A. For all Work, at the prices stated in Contractor's Bid, attached hereto as an exhibit.

ARTICLE 6 – PAYMENT PROCEDURES

6.01 SUBMITTAL AND PROCESSING OF PAYMENTS

A. Contractor shall submit Applications for Payment in accordance with Article 15 of the General Conditions. Applications for Payment will be processed by Engineer as provided in the General Conditions.

6.02 PROGRESS PAYMENTS; RETAINAGE

A. Owner shall make progress payments on account of the Contract Price on the basis of Contractor's Applications for Payment on or about the 25th day of each month during performance of the Work as provided in paragraphs 6.02. A. 1 below. All such payments will be measured by the schedule of values established in paragraph 2.05. A. of the General Conditions (and in the case of Unit Price Work based on the number of units completed) or, in the event there is no schedule of values, as provided in the General Requirements:

1. Prior to Substantial Completion, progress payments will be made in an

amount equal to the percentage indicated below but, in each case, less the aggregate of payments previously made and less such amounts as Engineer may determine or Owner may withhold, in accordance with paragraph 15.01 of the General Conditions:

a. 90% of Work completed (with the balance being retainage).
b. 90% of cost of materials and equipment not incorporated in the Work (with the balance being retainage).

2. The retainage shall be placed in an interest-bearing account by the Owner. The interest earned thereby will be paid to the Contractor with the Final Payment.

6.03 FINAL PAYMENT

A. Upon final completion and acceptance of the Work in accordance with paragraph 15.07 of the General Conditions, Owner shall pay the remainder of the Contract Price as recommended by Engineer as provided in said paragraph 15.07.

ARTICLE 7 – INTEREST

7.01 All moneys not paid when due as provided in Article 15 of the General Conditions shall bear interest at the prevailing money market rate.

ARTICLE 8 - CONTRACTOR'S REPRESENTATIONS

8.01 In order to induce Owner to enter this Agreement, Contractor makes the following representations:

A. Contractor has examined and carefully studied the Contract Documents and the other related data identified in the Bidding Documents.

B. Contractor has visited the Site and become familiar with and is satisfied as to the general, local, and Site conditions that may affect cost, progress, and performance of the Work.

C. Contractor is familiar with and is satisfied as to all federal, state, and local Laws and Regulations that may affect cost, progress, and performance of the Work.

D. Contractor has obtained and carefully studied (or assumes responsibility for having done so) all examinations, investigations, explorations, tests, studies, and data concerning conditions (surface, subsurface, and Underground Facilities) at or contiguous to the Site which may affect cost, progress, or performance of the Work or which relate to any aspect of the means, methods, techniques, sequences, and procedures of construction to be employed by Contractor, including applying the specific means, methods, techniques,

sequences, and procedures of construction, if any, expressly required by the Contract Documents to be employed by Contractor, and safety precautions and programs incident thereto.

E. Contractor does not consider that any further examinations, investigations, explorations, tests, studies, or data are necessary for the performance of the Work at the Contract Price, within the Contract Times, and in accordance with the other terms and conditions of the Contract Documents.

F. Contractor is aware of the general nature of work to be performed by Owner and others at the Site that relates to the Work as indicated in the Contract Documents.

G. Contractor has correlated the information known to Contractor, information and observations obtained from visits to the Site, and all examinations, investigations, explorations, tests, studies, and data with the Contract Documents.

H. Contractor has given Engineer written notice of all conflicts, errors, ambiguities, or discrepancies that Contractor has discovered in the Contract Documents, and the written resolutions thereof by Engineer is acceptable to Contractor.

I. The Contract Documents are generally sufficient to indicate and convey understanding of all terms and conditions for performance and furnishing of the Work.

ARTICLE 9 – CONTRACT DOCUMENTS

9.01 CONTENTS

A. The Contract Documents consist of the documents listed in the table of contents of the Project Manual and the drawings listed on the Sheet Index in the Drawings. The following which may be delivered or issued on or after the Effective Date of the Agreement and are not attached hereto:

1. Written Amendments;
2. Work Change Directives;
3. Change Order(s).

B. The documents listed in paragraph 9.01. A. are attached to this Agreement (except as expressly noted otherwise above).

C. There are no Contract Documents other than those listed above in this Article 9.

D. The Contract Documents may only be amended, modified, or supplemented as provided in Article 11 of the General Conditions.

ARTICLE 10 - MISCELLANEOUS

10.01 TERMS

A. Terms used in this Agreement will have the meanings indicated in the General Conditions.

10.02 ASSIGNMENT OF CONTRACT

A. No assignment by a party hereto of any rights under or interests in the Contract will be binding on another party hereto without the written consent of the party sought to be bound; and, specifically but without limitation, moneys that may become due and moneys that are due may not be assigned without such consent (except to the extent that the effect of this restriction may be limited by law), and unless specifically stated to the contrary in any written consent to an assignment, no assignment will release or discharge the assignor from any duty or responsibility under the Contract Documents.

10.03 SUCCESSORS AND ASSIGNS

A. Owner and Contractor each binds itself, its partners, successors, assigns, and legal representatives to the other party hereto, its partners, successors, assigns and legal representatives in respect to all covenants, agreements, and obligations contained in the Contract Documents.

10.04 SEVERABILITY

A. Any provision or part of the Contract Documents held to be void or unenforceable under any Law or Regulation shall be deemed stricken, and all remaining provisions shall continue to be valid and binding upon Owner and Contractor, who agree that the Contract Documents shall be reformed to replace such stricken provision or part thereof with a valid and enforceable provision that comes as close as possible to expressing the intention of the stricken provision.

IN WITNESS WHEROF, Owner and Contractor have signed this Agreement in duplicate. One counterpart each has been delivered to Owner and Contractor. All portions of the Contract Documents have been signed or identified by Owner and Contractor or on their behalf.

This Agreement will be effective on _____, 20__ (which is the Effective Date of the Agreement).

OWNER:

City of Bedford, Texas

By:_____
Clifford Blackwell
Interim City Manager

[CORPORATE SEAL]

Attest_____

Address for giving notices:

City of Bedford
2000 Forest Ridge Drive
Bedford, TX 76021

CONTRACTOR:

_____

By:_____

[CORPORATE SEAL]

Attest _____

Address for giving notices:

_____
_____
_____

License No._____
(Where Applicable)

Agent for service of process:_____

_____

(If Contractor is a corporation or a partnership, attach evidence of authority to sign.)

Designated Representative:	Designated Representative:
Name: Mark North	Name:_____
Title: CEO, Ark Contracting Services LLC	Title:_____
Address: 420 S. Dick Price Road	Address:_____
Kennedale, TX 76060	_____
Phone: 817-745-7400	Phone:_____
Facsimile: _____	Facsimile:_____

Approved as to Form and Legality this 28th day of July, 2020

_____

Owner's Attorney

PERFORMANCE BOND

STATE OF TEXAS §
§ **KNOW ALL MEN BY THESE PRESENTS:**
COUNTY OF TARRANT §

THAT Ark Contracting Services, LLC, a corporation organized and existing under the laws of the State of **Texas**, and fully authorized to transact business in the State of Texas, whose address is **420 S. Dick Price Road** of the City **Kennedale**, County of **Tarrant** of the State of **Texas**, (hereinafter referred to as "Principal"), and _____(hereinafter referred to as "Surety"), a corporation organized under the laws of the State of _____and authorized under the laws of the State of Texas to act as Surety on bonds for principals, are held and firmly bound unto the City of Bedford (hereinafter referred to as "Owner") in the penal sum of **$975,948.00**(not less than 100% of the approximate total amount of the Contract as evidenced in the proposal plus 10-percent of the stated penal sum as an additional sum of money representing additional court expenses, attorneys' fees, and liquidated damages arising out of or connected with the below identified Contract) in lawful money of the United States, for the payment whereof, the said Principal and Surety bind themselves, and their heirs, administrators, executors, successors, and assigns, jointly and severally, firmly by these presents:

WHEREAS, the Principal has entered into a certain written Contract with the Owner, dated the ____ day of _____20__, to which said Contract is hereby referred to and made a part hereof and as fully and to the same extent as if copied at length herein for the construction of _____.

NOW, THEREFORE, the condition of this obligation is such, that if the said Principal fully and faithfully executes the work and performance of the Contract in accordance with the plans, specifications, and Contract Documents, including any extensions thereof which may be granted with our without notice to Surety, during the original term thereof, and during the life of any guaranty required under the Contract, and according to the true intent and meaning of said Contract and the plans and specifications hereto annexed, if the Principal shall repair and/or replace all defects due to faulty materials or workmanship that appear within a period of one year from the date of Substantial Completion of the work, and if the Principal shall fully indemnify and save harmless the Owner from all costs and damages which Owner may suffer by reason of failure to so perform herein and shall fully reimburse and repay Owner all outlay and expense which the Owner may incur in making good any default or deficiency, then this obligation shall be void; otherwise, to remain in full force and effect; and in case said Contractor shall fail to do so, it is agreed that the Owner may do said work and supply such materials and charge the same against said Contractor and Surety on this obligation. Provided further, that if any legal action be filed on this Bond, venue shall lie in Tarrant County, Texas.

PROVIDED, HOWEVER, that this Bond is executed pursuant to the provisions Texas Government Code, Chapter 2253, as amended, and Article 7.19-1 of the Insurance Code, as amended, and all liabilities on this bond shall be determined in accordance with the provisions of said articles to the same extent as if they were fully copied at length herein.

Surety, for value received, stipulates and agrees that the bond shall

automatically be increased by the amount of any change order or supplemental agreement which increases the Contract price with or without notice to the Surety, but in no event shall a Change Order or Supplemental Agreement which reduces the Contract price decrease the penal sum of this Bond. And further that no change, extension of time, alteration, or addition to the terms of the Contract, or to the work performed thereunder, or the plans, specifications, or drawings accompanying the same shall in any way affect its obligation on this bond, and it does hereby waive notice of any such change, extension of time, alteration, or addition to the terms of the Contract or to the work to be performed thereunder.

Surety agrees that the bond provides for the repairs and/or replacement of all defects due to faulty materials and workmanship that appear within a period of one (1) year from the date of completion and acceptance of the improvement by the Owner.

The undersigned and designated agent is hereby designated by Surety herein as the agent resident to whom any requisite notice may be delivered and on whom service of process may be had in matters arising out of such suretyship.

IN WITNESS WHEREOF, the said Principal and Surety have signed and sealed this instrument on this the _____ day of _____,20__.

WITNESS

_____

PRINCIPAL

_____

Printed/Typed Name: _____

Title:_____

Company:

_____

Address: _____

_____

WITNESS

_____

SURETY

_____

Printed/Typed Name:

Title: _____

Company:

_____

Address: _____

_____

Note: Date of Bond must NOT be prior to date of Contract.

The Resident Agent of the Surety for delivery of notice and service of process is:

Name: _____

Address: _____

Phone number: _____

MAINTENANCE BOND

STATE OF TEXAS §
§ **KNOW ALL MEN BY THESE PRESENTS:**
COUNTY OF TARRANT §

THAT Ark Contracting Services, LLC a corporation organized and existing under the laws of the State of **Texas**, and fully authorized to transact business in the State of Texas, whose address is **420 S. Dick Price Road** of the City of **Kennedale**, County of **Tarrant**, State of **Texas** (hereinafter referred to as "Principal"), and _____(hereinafter referred to as "Surety"), a corporation organized under the laws of the State of _____ and authorized under the laws of the State of Texas to act as Surety on bonds for principals, are held and firmly bound unto the City of Bedford (hereinafter referred to as "Owner"), in the penal sum of $_____in lawful money of the United States, for the payment whereof, the said Principal and Surety bind themselves, and their heirs, administrators, executors, successors, and assigns, jointly and severally, firmly by these presents:

WHEREAS, the Principal has entered into a certain written Contract with the Owner, dated the _____day ____ of _____20___, to which said Contract is hereby referred to and made a part hereof and as fully and to the same extent as if copied at length herein for the construction of_____.

NOW, THEREFORE, the condition of this obligation is such, that the bond guarantees the full and proper maintenance and repair of the work herein contracted to be done and performed for a period of two year(s) from the date of Substantial Completion and Principal will do all necessary backfilling that may arise on account of sunken conditions in ditches, or otherwise, and do and perform all necessary work and repair any defective condition growing out of or arising from the improper laying or construction of same, or on account of any breaking of same caused by said Contractor in construction of same, or on account of any defect arising in any of said work laid or constructed by said Contractor or on account of improper excavation or backfilling, it being understood that the purpose of this section is to cover all defective conditions arising by reason of defective materials, work or labor performed by said Contractor, then this obligation shall be void; otherwise, to remain in full force and effect; and in case said Contractor shall fail to do so, it is agreed that the Owner may do said work and supply such materials and charge the same against said Contractor and Surety on this obligation. Provided further, that if any legal action be filed on this Bond, venue shall lie in Tarrant County, Texas.

PROVIDED, HOWEVER, that said Surety, for value received, stipulates and agrees the bond shall automatically be increased by the amount of any Change Order or supplemental agreement which increases the Contract price with or without notice to the Surety and that no change, extension of time, alteration, or addition to the terms of the Contract, or to the work performed thereunder, or the plans, specifications, or drawings accompanying the same shall in any way affect its obligation on this bond, and it does hereby waive notice of any such change, extension of time, alteration, or addition to the terms of the Contract or to the work to be performed thereunder.

The undersigned and designated agent is hereby designated by Surety herein

as the agent resident to whom any requisite notice may be delivered and on whom service of process may be had in matters arising out of such suretyship.

IN WITNESS WHEREOF, the said Principal and Surety have signed and sealed this instrument on this the _____ day of _____,20__.

WITNESS

_____

PRINCIPAL

_____

Printed/Typed Name:

_____

Title: _____

Company:

_____

Address: _____

_____

SURETY

WITNESS

_____

Printed/Typed Name:

_____

Title:

_____

_____

Company:

_____

Address: _____

.

_____

Note: Date of Bond must NOT be prior to date of Contract

The Resident Agent of the Surety for delivery of notice and service of process is:

Name: _____

Address: _____

Phone number: _____

BONDS AND INSURANCE

The successful bidder shall furnish:

- Performance Bond
- Payment Bond
- Maintenance Bond
- Insurance

in accordance with the requirements of the Standard General Conditions and the Supplementary Conditions.

WAGE RATE DECISION

The minimum wage rates for this project are duplicated following.

"General Decision Number: TX20200025 01/03/2020

Superseded General Decision Number: TX20190025

State: Texas

Construction Type: Highway

Counties: Archer, Callahan, Clay, Collin, Dallas, Delta,
Denton, Ellis, Grayson, Hunt, Johnson, Jones, Kaufman, Parker,
Rockwall, Tarrant and Wise Counties in Texas.

HIGHWAY CONSTRUCTION PROJECTS (excluding tunnels, building
structures in rest area projects & railroad construction;
bascule, suspension & spandrel arch bridges designed for
commercial navigation, bridges involving marine construction;
and other major bridges).

Note: Under Executive Order (EO) 13658, an hourly minimum wage
of $10.80 for calendar year 2020 applies to all contracts
subject to the Davis-Bacon Act for which the contract is awarded
(and any solicitation was issued) on or after January 1, 2015.
If this contract is covered by the EO, the contractor must pay
all workers in any classification listed on this wage
determination at least $10.80 per hour (or the applicable
wage rate listed on this wage determination, if it is higher)
for all hours spent performing on the contract in calendar
year 2020. If this contract is covered by the EO and a
classification considered necessary for performance of work on
the contract does not appear on this wage determination, the
contractor must pay workers in that classification at least
the wage rate determined through the conformance process set
forth in 29 CFR 5.5(a)(1)(ii) (or the EO minimum wage rate,
if it is higher than the conformed wage rate). The EO minimum
wage rate will be adjusted annually. Please note that
this EO applies to the above-mentioned types of contracts
entered into by the federal government that are subject
to the Davis-Bacon Act itself, but it does not apply

to contracts subject only to the Davis-Bacon Related Acts, including those set forth at 29 CFR 5.1(a)(2)-(60). Additional information on contractor requirements and worker protections under the EO is available at www.dol.gov/whd/govcontracts.

Modification Number Publication Date
0 01/03/2020

* SUTX2011-007 08/03/2011

Rates Fringes

CONCRETE FINISHER (Paving and Structures).....$ 14.12

ELECTRICIAN.....$ 19.80

FORM BUILDER/FORM SETTER
Paving & Curb.....$ 13.16
Structures.....$ 13.84

LABORER
Asphalt Raker.....$ 12.69
Flagger.....$ 10.06
Laborer, Common.....$ 10.72
Laborer, Utility.....$ 12.32
Pipelayer.....$ 13.24
Work Zone Barricade
Servicer.....$ 11.68

POWER EQUIPMENT OPERATOR:
Asphalt Distributor.....$ 15.32
Asphalt Paving Machine.....$ 13.99
Broom or Sweeper.....$ 11.74
Concrete Pavement
Finishing Machine.....$ 16.05
Concrete Saw.....$ 14.48
Crane Operator, Lattice
Boom 80 Tons or Less.....$ 17.27
Crane Operator, Lattice
Boom over 80 Tons.....$ 20.52
Crane, Hydraulic 80 Tons

or Less.....$ 18.12
Crawler Tractor.....$ 14.07
Excavator, 50,000 pounds
or less.....$ 17.19
Excavator, over 50,000
pounds.....$ 16.99
Foundation Drill , Truck
Mounted.....$ 21.07
Foundation Drill, Crawler
Mounted.....$ 17.99
Front End Loader 3 CY or
Less.....$ 13.69
Front End Loader, over 3 CY.$ 14.72
Loader/Backhoe.....$ 15.18
Mechanic.....$ 17.68
Milling Machine.....$ 14.32
Motor Grader, Fine Grade....$ 17.19
Motor Grader, Rough.....$ 16.02
Pavement Marking Machine....$ 13.63
Reclaimer/Pulverizer.....$ 11.01
Roller, Asphalt.....$ 13.08
Roller, Other.....$ 11.51
Scraper.....$ 12.96
Small Slipform Machine.....$ 15.96
Spreader Box.....$ 14.73

Servicer.....$ 14.58

Steel Worker (Reinforcing).....$ 16.18

TRUCK DRIVER
Lowboy-Float.....$ 16.24
Off Road Hauler.....$ 12.25
Single Axle.....$ 12.31
Single or Tandem Axle Dump
Truck.....$ 12.62
Tandem Axle Tractor with
Semi Trailer.....$ 12.86
Transit-Mix.....$ 14.14

WELDER.....$ 14.84

WELDERS - Receive rate prescribed for craft performing operation to which welding is incidental.

==========

Note: Executive Order (EO) 13706, Establishing Paid Sick Leave for Federal Contractors applies to all contracts subject to the Davis-Bacon Act for which the contract is awarded (and any solicitation was issued) on or after January 1, 2017. If this contract is covered by the EO, the contractor must provide employees with 1 hour of paid sick leave for every 30 hours they work, up to 56 hours of paid sick leave each year. Employees must be permitted to use paid sick leave for their own illness, injury or other health-related needs, including preventive care; to assist a family member (or person who is like family to the employee) who is ill, injured, or has other health-related needs, including preventive care; or for reasons resulting from, or to assist a family member (or person who is like family to the employee) who is a victim of, domestic violence, sexual assault, or stalking. Additional information on contractor requirements and worker protections under the EO is available at www.dol.gov/whd/govcontracts.

Unlisted classifications needed for work not included within the scope of the classifications listed may be added after award only as provided in the labor standards contract clauses (29CFR 5.5 (a) (1) (ii)).

The body of each wage determination lists the classification and wage rates that have been found to be prevailing for the cited type(s) of construction in the area covered by the wage determination. The classifications are listed in alphabetical order of ""identifiers"" that indicate whether the particular rate is a union rate (current union negotiated rate for local), a survey rate (weighted average rate) or a union average rate (weighted union average rate).

Union Rate Identifiers

A four letter classification abbreviation identifier enclosed in dotted lines beginning with characters other than ""SU"" or ""UAVG"" denotes that the union classification and rate were prevailing for that classification in the survey. Example: PLUM0198-005 07/01/2014. PLUM is an abbreviation identifier of the union which prevailed in the survey for this

classification, which in this example would be Plumbers. 0198 indicates the local union number or district council number where applicable, i.e., Plumbers Local 0198. The next number, 005 in the example, is an internal number used in processing the wage determination. 07/01/2014 is the effective date of the most current negotiated rate, which in this example is July 1, 2014.

Union prevailing wage rates are updated to reflect all rate changes in the collective bargaining agreement (CBA) governing this classification and rate.

Survey Rate Identifiers

Classifications listed under the ""SU"" identifier indicate that no one rate prevailed for this classification in the survey and the published rate is derived by computing a weighted average rate based on all the rates reported in the survey for that classification. As this weighted average rate includes all rates reported in the survey, it may include both union and non-union rates. Example: SULA2012-007 5/13/2014. SU indicates the rates are survey rates based on a weighted average calculation of rates and are not majority rates. LA indicates the State of Louisiana. 2012 is the year of survey on which these classifications and rates are based. The next number, 007 in the example, is an internal number used in producing the wage determination. 5/13/2014 indicates the survey completion date for the classifications and rates under that identifier.

Survey wage rates are not updated and remain in effect until a new survey is conducted.

Union Average Rate Identifiers

Classification(s) listed under the UAVG identifier indicate that no single majority rate prevailed for those classifications; however, 100% of the data reported for the classifications was union data. EXAMPLE: UAVG-OH-0010 08/29/2014. UAVG indicates that the rate is a weighted union average rate. OH indicates the state. The next number, 0010 in the example, is an internal number used in producing the wage determination. 08/29/2014 indicates the survey completion date for the classifications and rates under that identifier.

A UAVG rate will be updated once a year, usually in January of each year, to reflect a weighted average of the current

negotiated/CBA rate of the union locals from which the rate is based.

WAGE DETERMINATION APPEALS PROCESS

1.) Has there been an initial decision in the matter? This can be:

* an existing published wage determination
* a survey underlying a wage determination
* a Wage and Hour Division letter setting forth a position on a wage determination matter
* a conformance (additional classification and rate) ruling

On survey related matters, initial contact, including requests for summaries of surveys, should be with the Wage and Hour Regional Office for the area in which the survey was conducted because those Regional Offices have responsibility for the Davis-Bacon survey program. If the response from this initial contact is not satisfactory, then the process described in 2.) and 3.) should be followed.

With regard to any other matter not yet ripe for the formal process described here, initial contact should be with the Branch of Construction Wage Determinations. Write to:

Branch of Construction Wage Determinations
Wage and Hour Division
U.S. Department of Labor
200 Constitution Avenue, N.W.
Washington, DC 20210

2.) If the answer to the question in 1.) is yes, then an interested party (those affected by the action) can request review and reconsideration from the Wage and Hour Administrator (See 29 CFR Part 1.8 and 29 CFR Part 7). Write to:

Wage and Hour Administrator
U.S. Department of Labor
200 Constitution Avenue, N.W.
Washington, DC 20210

The request should be accompanied by a full statement of the interested party's position and by any information (wage payment data, project description, area practice material, etc.) that the requestor considers relevant to the issue.

3.) If the decision of the Administrator is not favorable, an interested party may appeal directly to the Administrative Review Board (formerly the Wage Appeals Board). Write to:

Administrative Review Board
U.S. Department of Labor
200 Constitution Avenue, N.W.
Washington, DC 20210

4.) All decisions by the Administrative Review Board are final.

==========

END OF GENERAL DECISION
"

AGENDA

CITY OF BEDFORD
Discover the Center

Form TCG 2271
VERIFICATION REQUIRED BY TEXAS GOVERNMENT CODE CHAPTER 2271

By signing below, Company hereby verifies the following:

1. Company does not boycott Israel; and
2. Company will not boycott Israel during the term of the contract.

SIGNED BY: _____

Printed Name/Title: _____

Company Name: _____

Date signed: _____

Government Code § 2271.002. Provision Required in Contract
Effective: **September 1, 2019**

A governmental entity may not enter into a contract with a company for goods or services unless the contract contains a written verification from the company that it:
(1) does not boycott Israel; and
(2) will not boycott Israel during the term of the contract.

The following definitions apply:

(1) "Boycott Israel" means refusing to deal with, terminating business activities with, or otherwise taking any action that is intended to penalize, inflict economic harm on, or limit commercial relations specifically with Israel, or with a person or entity doing business in Israel or in an Israeli-controlled territory, but does not include an action made for ordinary business purposes.

(2) "Company" means a for-profit sole proprietorship, organization, association, corporation, partnership, joint venture, limited partnership, limited liability partnership, or limited liability company, including a wholly owned subsidiary, majority-owned subsidiary, parent company, or affiliate of those entities or business associations that exists to make a profit, except that the term does not include a sole proprietorship.

(3) "Governmental entity" means a state agency or political subdivision of this state.

State law requires verification from a Company for contracts involving goods or services of greater than $100,000 before the City can enter into the contract.

AGENDA

CERTIFICATE OF INTERESTED PARTIES

FORM 1295

OFFICE USE ONLY

Complete Nos. 1 - 4 and 6 if there are interested parties.
Complete Nos. 1, 2, 3, 5, and 6 if there are no interested parties.

1 Name of business entity filing form, and the city, state and country of the business entity's place of business.

2 Name of governmental entity or state agency that is a party to the contract for which the form is being filed.

3 Provide the identification number used by the governmental entity or state agency to track or identify the contract, and provide a description of the services, goods, or other property to be provided under the contract.

4

Name of Interested Party	City, State, Country (place of business)	Nature of Interest (check applicable)	
		Controlling	Intermediary

5 Check only if there is NO Interested Party. ☐

6 UNSWORN DECLARATION

My name is _____, and my date of birth is _____.

My address is _____, _____, _____, _____, _____.
(street) (city) (state) (zip code) (country)

I declare under penalty of perjury that the foregoing is true and correct.

Executed in _____ County, State of _____ , on the _____ day of _____, 20_____.
(month) (year)

_____
Signature of authorized agent of contracting business entity
(Declarant)

ADD ADDITIONAL PAGES AS NECESSARY

Must file online at www.ethics.state.tx.us/File

CONFLICT OF INTEREST QUESTIONNAIRE
For vendor doing business with local governmental entity

A complete copy of Chapter 176 of the Local Government Code may be found at http://www.statutes.legis.state.tx.us/Docs/LG/htm/LG.176.htm. For easy reference, below are some of the sections cited on this form.

Local Government Code § 176.001(1-a): "Business relationship" means a connection between two or more parties based on commercial activity of one of the parties. The term does not include a connection based on:

(A) a transaction that is subject to rate or fee regulation by a federal, state, or local governmental entity or an agency of a federal, state, or local governmental entity;

(B) a transaction conducted at a price and subject to terms available to the public; or

(C) a purchase or lease of goods or services from a person that is chartered by a state or federal agency and that is subject to regular examination by, and reporting to, that agency.

Local Government Code § 176.003(a)(2)(A) and (B):

(a) A local government officer shall file a conflicts disclosure statement with respect to a vendor if:

***

(2) the vendor:

(A) has an employment or other business relationship with the local government officer or a family member of the officer that results in the officer or family member receiving taxable income, other than investment income, that exceeds $2,500 during the 12-month period preceding the date that the officer becomes aware that

(i) a contract between the local governmental entity and vendor has been executed; or

(ii) the local governmental entity is considering entering into a contract with the vendor;

(B) has given to the local government officer or a family member of the officer one or more gifts that have an aggregate value of more than $100 in the 12-month period preceding the date the officer becomes aware that:

(i) a contract between the local governmental entity and vendor has been executed; or

(ii) the local governmental entity is considering entering into a contract with the vendor.

Local Government Code § 176.006(a) and (a-1)

(a) A vendor shall file a completed conflict of interest questionnaire if the vendor has a business relationship with a local governmental entity and:

(1) has an employment or other business relationship with a local government officer of that local governmental entity, or a family member of the officer, described by Section 176.003(a)(2)(A);

(2) has given a local government officer of that local governmental entity, or a family member of the officer, one or more gifts with the aggregate value specified by Section 176.003(a)(2)(B), excluding any gift described by Section 176.003(a-1); or

(3) has a family relationship with a local government officer of that local governmental entity.

(a-1) The completed conflict of interest questionnaire must be filed with the appropriate records administrator not later than the seventh business day after the later of:

(1) the date that the vendor:

(A) begins discussions or negotiations to enter into a contract with the local governmental entity; or

(B) submits to the local governmental entity an application, response to a request for proposals or bids, correspondence, or another writing related to a potential contract with the local governmental entity; or

(2) the date the vendor becomes aware:

(A) of an employment or other business relationship with a local government officer, or a family member of the officer, described by Subsection (a);

(B) that the vendor has given one or more gifts described by Subsection (a); or

(C) of a family relationship with a local government officer.

AGENDA

CONFLICT OF INTEREST QUESTIONNAIRE

FORM CIQ

For vendor doing business with local governmental entity

This questionnaire reflects changes made to the law by H.B. 23, 84th Leg., Regular Session.

This questionnaire is being filed in accordance with Chapter 176, Local Government Code, by a vendor who has a business relationship as defined by Section 176.001(1-a) with a local governmental entity and the vendor meets requirements under Section 176.006(a).

By law this questionnaire must be filed with the records administrator of the local governmental entity not later than the 7th business day after the date the vendor becomes aware of facts that require the statement to be filed. *See* Section 176.006(a-1), Local Government Code.

A vendor commits an offense if the vendor knowingly violates Section 176.006, Local Government Code. An offense under this section is a misdemeanor.

OFFICE USE ONLY

Date Received

1 **Name of vendor who has a business relationship with local governmental entity.**

2 ☐ **Check this box if you are filing an update to a previously filed questionnaire.** (The law requires that you file an updated completed questionnaire with the appropriate filing authority not later than the 7th business day after the date on which you became aware that the originally filed questionnaire was incomplete or inaccurate.)

3 **Name of local government officer about whom the information is being disclosed.**

_____
Name of Officer

4 **Describe each employment or other business relationship with the local government officer, or a family member of the officer, as described by Section 176.003(a)(2)(A). Also describe any family relationship with the local government officer. Complete subparts A and B for each employment or business relationship described. Attach additional pages to this Form CIQ as necessary.**

A. Is the local government officer or a family member of the officer receiving or likely to receive taxable income, other than investment income, from the vendor?

☐ Yes ☐ No

B. Is the vendor receiving or likely to receive taxable income, other than investment income, from or at the direction of the local government officer or a family member of the officer AND the taxable income is not received from the local governmental entity?

☐ Yes ☐ No

5 **Describe each employment or business relationship that the vendor named in Section 1 maintains with a corporation or other business entity with respect to which the local government officer serves as an officer or director, or holds an ownership interest of one percent or more.**

6 ☐ Check this box if the vendor has given the local government officer or a family member of the officer one or more gifts as described in Section 176.003(a)(2)(B), excluding gifts described in Section 176.003(a-1).

7

_____ _____
Signature of vendor doing business with the governmental entity Date

AGENDA

Brookwood Hills Stream and Sanitary Sewer Rehibilitation
Bid Reference Number: SIEDC (4B)-20-04
Bid Date: Thursday, July 2, 2020 at 2:00 P.M.
Bid Tabulation Summary

BIDDERS

	Arc Contracting Services, LLC	TWDirt, LLC	Klutz Construction, LLC	Iron T Construction, Inc.
TOTAL AMOUNT BID	$475,948.00	$519,542.79	$546,048.00	$629,940.00
	Recommended Bid			

	A & B Construction, LLC	FHN Construction LLC	TREG Erosion Control Specialist
TOTAL AMOUNT BID	$738,457.80	$786,880.00	$827,553.00

AVERAGE BID
$646,668.51

AGENDA

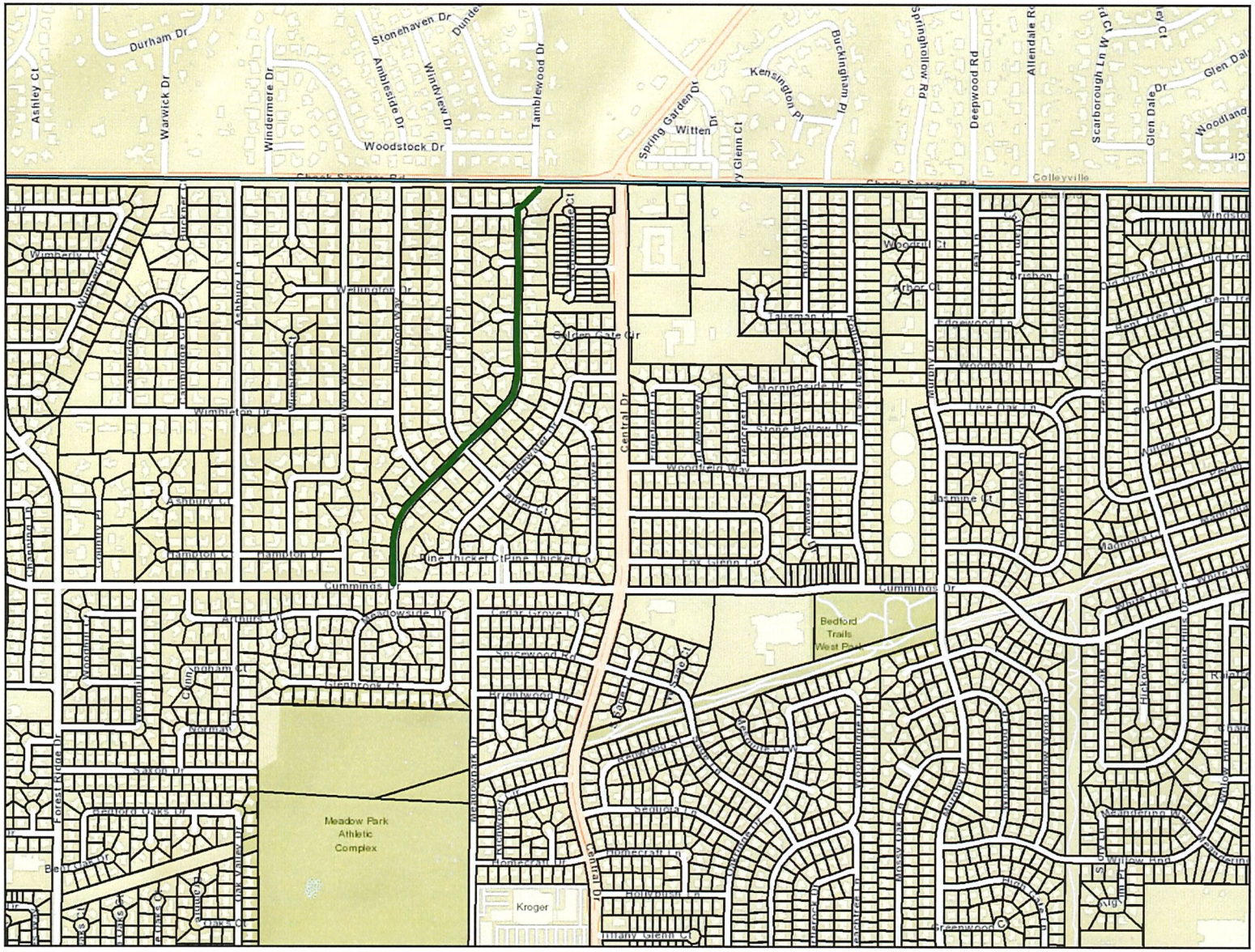

Brookwood Hills Stream and Sanitary Sewer

THIS MAP IS NOT INTENDED TO DISPLAY PRECISE LOCATIONS AND DIMENSIONS. THE CITY OF BEDFORD ASSUMES NO LIABILITY FOR THE ACCURACY OF THE MAP.

Legend

City Limits

Parcel

0 0.125 0.25
mi

N

Date: 7/15/2020

AGENDA

BAIRD, HAMPTON & BROWN

building partners

July 14, 2020

City Staff
City of Bedford
1813 Reliance Parkway
Bedford, TX 76021-6109

RE: Brookwood Hills Stream and Sanitary Sewer Rehabilitation
Project Award Recommendation

Dear City Staff,

Bids for the above referenced project on July 2, 2020 at the City of Bedford Public Works Office at 2:00 PM. In all seven bids were received, and totals were verified. Ark Contracting Services, LLC submitted the low bid of $475,948.00 with a bid of $37,400.00 for Alternate Item 1.

One of the three contractor references responded. Mr. Glen Campbell, PE with GWC Engineering expects Ark Contracting Services, LLC do perform well based on over 20 years of working on projects with them. He stated he has worked on multiple drainage and stream projects with the contractor and stated he has not had to deal with any contested change orders or conflicts originating from the contractor.

Also, Ark Contracting Services, LLC successfully completed the Sulphur Branch Trunk Sewer Rehab/Replacement Segment 11 project with final acceptance form the City of Bedford on February 11, 2016.

Based on this information, we are recommending the award of this contract to Ark Contracting Services, LLC in the amount of $475,948.00, and I will update the City upon additional responses from contractor references. Please let me know if you need any additional information.

Sincerely:
BAIRD, HAMPTON & BROWN

Scott Crawford, PE
Project Manager, Civil Engineer

949 Hilltop Drive | Weatherford, Texas 76086 | PH: 817.596.7575 | FX: 817.887.3016
TBPELS Firm #44, #10011300, #10011302, #10194146
engineering | surveying | landscape

AGENDA

Council Agenda Background

PRESENTER:	Bill Syblon, Development Director Meg Jakubik, Strategic Services Manager	**DATE:**	07/28/20

Staff Report

ITEM:

Report on efforts to support Bedford businesses.

City Attorney Review: N/A

DISCUSSION:

Staff will update Council on efforts to support local Bedford businesses.

ATTACHMENTS:

N/A